7 部署 5G

7.1 5G拨号上网场景
7.2 5G2B专线场景
7.3 5G冗余保护场景

7.1 5G 拨号上网场景

7.1.1 配置企业通过 5G 链路接入 Internet 示例

场景介绍

5G Cellular接口是路由器用来实现5G技术的物理接口，它为用户提供了企业级的无线广域网接入服务，主要用于eMBB场景。与LTE相比，5G系统可以为企业用户提供更大带宽的无线广域接入服务。

路由器的5G功能，可以实现企业分支机构或中小企业的无线宽带接入及互联的需求。5G功能不仅为企业提供了灵活、高效、快速部署网络的解决方案，也为企业提供了一种有线广域链路的备份方法。与LTE相比，5G具备更大带宽的无线广域接入能力，可以为企业用户提供更为丰富的3D高清视频、云桌面和智慧办公等业务。

组网需求

如图1所示，企业分支和总部之间通过Internet网络互通。企业分支使用AR企业路由器作为出口网关，AR企业路由器通过5G链路接入Internet，与企业总部建立连接。该企业分支办理了包年业务，采用自动拨号方式接入Internet。

图 7-1 配置企业通过 5G 链路接入 Internet 组网图

数据准备

表 7-1 数据准备表

项目	数据	说明
运营商分配给企业分支的APN名称	5gnet	APN名称需提前从运营商处获取。
运营商分配给分支的5G Cellular接口的IP地址	1.1.1.1/32	5G Cellular接口拨号接入运营商后，运营商给5G Cellular接口自动分配的IP地址。
分支AR1 LAN侧接口信息	所属VLAN：20 网关地址：VLANIF20（10.1.1.1/24） LAN侧物理接口：GE0/0/1	VLAN 20为分支子网用户所在的VLAN，且分支子网用户的网关为VLANIF20接口。
NQA探测的目的地址	公网DNS服务器地址：114.114.114.114	NQA测试例的测试类型必须为ICMP测试，且到NQA测试例的目的地址必须路由可达。本例中选择公网的DNS服务器地址为探测目的地址，也可以选择其他路由可达的公网地址。 114.114.114.114是国内通用的DNS地址，国内用户使用较多，本例中用该地址来测试5G链路的连通性。8.8.8.8是全球通用的DNS地址，如果是国外用户，可以用8.8.8.8地址来测试5G链路的连通性。

配置思路

1. 配置5G Cellular接口的连接参数及NQA测试例，实现5G Cellular接口接入5G网络。
2. 配置企业子网，为内部用户自动分配IP地址。
3. 配置NAT功能，实现分支的内网用户可以访问Internet。
4. 配置缺省路由，指定出接口为5G Cellular接口，使该企业分支内网的流量通过5G Cellular接口上行传输到Internet。

说明

在5G Cellular接口下执行命令**dialer enable-circular**配置轮询拨号功能时，设备会同时下发自动拨号、IP地址协商和5G Modem自愈的相关配置，无需再重复配置。

操作步骤

1. 配置5G Cellular接口的连接参数及NQA测试例，实现5G Cellular接口接入5G网络。

a. 创建APN模板。

```
<Huawei> system-view
[Huawei] sysname AR1
[AR1] apn profile 5gprofile
[AR1-apn-profile-5gprofile] apn 5gnet
[AR1-apn-profile-5gprofile] quit
```

b. 使能轮询DCC功能，配置自动拨号连接。

```
[AR1] interface Cellular 1/0/0
[AR1-Cellular1/0/0] dialer enable-circular
```

c. 配置NQA功能，探测5G链路的连通性。

```
[AR1] nqa test-instance user test
[AR1-nqa-user-test] test-type icmp
[AR1-nqa-user-test] frequency 30
[AR1-nqa-user-test] destination-address ipv4 114.114.114.114
[AR1-nqa-user-test] start now
[AR1-nqa-user-test] quit
```

d. 在5G Cellular接口上绑定APN模板及NQA测试例。

```
[AR1-Cellular1/0/0] apn-profile 5gprofile
Info: The configuration will become effective after link reset.
[AR1-Cellular1/0/0] modem auto-recovery track nqa user test probe-cycle seconds 30
[AR1-Cellular1/0/0] modem auto-recovery track action modem-reboot fail-times 10
mandatory
[AR1-Cellular1/0/0] shutdown
[AR1-Cellular1/0/0] undo shutdown
[AR1-Cellular1/0/0] quit
```

2. 配置企业子网，为内部用户自动分配IP地址。

   # 配置分支子网，创建VLAN20，将GE0/0/1接口加入VLAN20，并配置DHCP功能。

```
[AR1] vlan 20
[AR1-vlan20] quit
[AR1] interface GigabitEthernet 0/0/1
[AR1-GigabitEthernet0/0/1] port link-type trunk
[AR1-GigabitEthernet0/0/1] port trunk allow-pass vlan 20
[AR1-GigabitEthernet0/0/1] quit
[AR1] dhcp enable
[AR1] interface vlanif 20
[AR1-Vlanif20] ip address 10.1.1.1 24
[AR1-Vlanif20] dhcp select interface
[AR1-Vlanif20] quit
```

3. 配置分支的NAT功能。

```
[AR1] acl number 3000
[AR1-acl-adv-3000] rule 5 permit ip
[AR1-acl-adv-3000] quit
[AR1] interface cellular 1/0/0
[AR1-Cellular1/0/0] nat outbound 3000
[AR1-Cellular1/0/0] quit
```

4. 配置静态路由，使企业分支和总部的内网流量可以上行传输到Internet。

   # 配置分支的缺省路由，指定出接口为5G Cellular接口。

```
[AR1] ip route-static 0.0.0.0 0.0.0.0 cellular 1/0/0
```

验证

1. 在AR1上执行命令**display ip interface brief Cellular 1/0/0**查看5G Cellular接口的详细信息，当接口上有流量传送时，可以看到接口获取到的IP地址，接口的物理状态和链路层协议状态都是Up。

```
<AR1> display ip interface brief Cellular 1/0/0
*down: administratively down
^down: standby
(l): loopback
(s): spoofing
(E): E-Trunk down
```

```
Interface                    IP Address/Mask      Physical   Protocol

Cellular1/0/0                1.1.1.1/32           up         up
```

2. 在AR1上执行命令**display cellular 1/0/0 all**查看5G数据卡的呼叫连接信息，可以看到APN为5gnet、无线网络类型为Automatic以及网络连接方式为5G(NSA)。

```
<AR1> display Cellular 1/0/0 all
Modem State:
Hardware Information.
=====================
Model = RG801
Modem Type = 5G module
Modem Firmware Version = RG801HEAAAR01A07M8G
Hardware Version = HiB5000_MODEM Ver.A
Integrate circuit card identity (ICCID) = 98681020100202000069
International Mobile Subscriber Identity (IMSI) = 460070075591996
Mobile Station International ISDN Number (MSISDN) = None
International Mobile Equipment Identity (IMEI) = 867147050004457
Factory Serial Number (FSN) = 0123456789ABCDEF
Modem Status = Online
Profile Information.
====================
Profile 1
--------
PDP Type = IPv4, Header Compression = OFF
Data Compression = OFF
Access Point Name (APN) = 5gnet
Packet Session Status = Active
* - Default profile
Network Information.
====================
Current Service Status = Service available
Service Domain = Combined
Current Service = PS
Packet Service = Attached
Packet Session Status = Active
Current Roaming Status = Roaming
Network Selection Mode = Automatic
Network Connection Mode = LTE-NR
Current Network Connection = 5G(NSA)
Mobile Country Code (MCC) = 369
Mobile Network Code (MNC) = 77
Mobile Operator Information = Unknown
Tracking Area Code (TAC) = 1002
Cell ID = 9881858
Radio Information.
==================
Current Bands :
  WCDMA: AUTO
  LTE: B3
  NR: AUTO
LTE:
Current Band = B3
Current RSSI >= -51 dBm
Current RSRP = -71 dBm (strong)
Current RSRQ = -6 dB
Current SINR = 6 dB
NR:
Current Band = N78
Current RSRP = -65 dBm (strong)
Current RSRQ = -10 dB
Current SINR = 38 dB
Bands supported :
  WCDMA: WCDMA850 WCDMA900 WCDMA2100
  FDD LTE: B1 B3 B5 B7 B8 B20 B28
  TDD LTE: B34 B38 B39 B40 B41
  FDD NR: N1 N3 N28
  TDD NR: N41 N77 N78 N79
Modem Security Information.
===========================
```

```
SIM ID = 1
PIN Verification = Disabled
PIN Status = Ready
Number of Retries remaining = 3
SIM Status = OK
```

配置脚本

AR1配置文件

```
#
 sysname AR1
#
vlan batch 20
#
dhcp enable
#
acl number 3000
 rule 5 permit ip
#
interface Vlanif20
 ip address 10.1.1.1 255.255.255.0
 dhcp select interface
#
interface GigabitEthernet0/0/1
 port link-type trunk
 port trunk allow-pass vlan 20
#
interface Cellular1/0/0
 dialer enable-circular
 apn-profile 5gprofile
 dialer timer autodial 10
 nat outbound 3000
 modem auto-recovery dial action modem-reboot fail-times 128
 modem auto-recovery track action modem-reboot fail-times 10 mandatory
 modem auto-recovery icmp-unreachable action modem-reboot
 modem auto-recovery services-unavailable action modem-reboot test-times 0 interval 3600
 modem auto-recovery track nqa user test probe-cycle seconds 30
 ip address negotiate
#
apn profile 5gprofile
 apn 5gnet
#
ip route-static 0.0.0.0 0.0.0.0 Cellular1/0/0
#
nqa test-instance user test
 test-type icmp
 destination-address ipv4 114.114.114.114
 frequency 30
 start now
#
return
```

7.1.2 配置企业通过 5G IPv6 链路接入 Internet 示例

场景介绍

5G Cellular接口是路由器用来实现5G技术的物理接口，它为用户提供了企业级的无线广域网接入服务，主要用于eMBB场景。IPv6可以为海量机器类通信提供足够的IP地址，相比于IPv4，IPv6协议新增的扩展报文头、端到端分片等功能，有助于提升网络的可靠性、降低网络时延。IPv6推进了5G网络的发展，相反，5G的部署也将激发基于IPv6的技术创新。

路由器的5G功能，可以实现企业分支机构或中小企业的无线宽带接入及互联的需求。5G功能不仅为企业提供了灵活、高效、快速部署网络的解决方案，也为企业提供了一

种有线广域链路的备份方法。与LTE相比，5G具备更大带宽的无线广域接入能力，可以为企业用户提供更为丰富的3D高清视频、云桌面和智慧办公等业务。

组网需求

如图1所示，企业分支和总部之间通过Internet网络互通。企业分支使用AR企业路由器作为出口网关，AR企业路由器通过5G IPv6链路接入Internet，与企业总部建立连接。该企业分支办理了包年业务，采用自动拨号方式接入Internet。

图 7-2 配置企业通过 5G IPv6 链路接入 Internet 组网图

数据准备

表 7-2 数据准备表

项目	数据	说明
运营商分配给企业分支的APN名称	5gnet	APN名称需提前从运营商处获取。
运营商分配给分支的5G Cellular接口的IPv6地址	2408:843E:C00:8E4:2E0:FC20:19:2020/64	5G Cellular接口拨号接入运营商后，运营商给5G Cellular接口自动分配的IPv6地址。
分支AR1 LAN侧接口信息	所属VLAN：20 网关地址：VLANIF20（280d::1/64） LAN侧物理接口：GE0/0/1	VLAN 20为分支子网用户所在的VLAN，且分支子网用户的网关为VLANIF20接口。 **说明** AR不支持IPv6 NAT, 为了使回程报文能够在网络侧被正确转发，LAN侧网段必须由运营商提供。运营商设备通过配置Frame-Route可以为无线用户指定LAN侧网段。
NQA探测的目的地址	公网DNS服务器地址：240c::6666	NQA测试例的测试类型必须为ICMP测试，且到NQA测试例的目的地址必须路由可达。本例中选择公网的DNS服务器地址为探测目的地址，也可以选择其他路由可达的公网地址。 240c::6666是国内通用的DNS地址，国内用户使用较多，本例中用该地址来测试5G链路的连通性。 2001:4860:4860::8888是全球通用的DNS地址，如果是国外用户，可以用2001:4860:4860::8888地址来测试5G链路的连通性。

配置思路

1. 配置5G Cellular接口的连接参数及NQA测试例，实现5G Cellular接口接入5G网络。
2. 配置企业子网，为内部用户自动分配IP地址。
3. 配置NAT功能，实现分支的内网用户可以访问Internet。
4. 配置缺省路由，指定出接口为5G Cellular接口，使该企业分支内网的流量通过5G Cellular接口上行传输到Internet。

说明

在5G Cellular接口下执行命令**dialer enable-circular**配置轮询拨号功能时，设备会默认下发IPv4地址协商功能，如果不需要获取IPv4地址，可以执行undo ip address negotiate命令删除IPv4地址协商功能。

操作步骤

1. 配置5G Cellular接口的连接参数及NQA测试例，实现5G Cellular接口接入5G网络。
   a. 创建APN模板。
   ```
   <Huawei> system-view
   [Huawei] sysname AR1
   [AR1] apn profile 5gprofile
   [AR1-apn-profile-5gprofile] apn 5gnet
   [AR1-apn-profile-5gprofile] quit
   ```
   b. 使能IPv6功能。
   ```
   [AR1] ipv6
   [AR1] interface Cellular 2/0/0
   [AR1-Cellular2/0/0] ipv6 enable
   [AR1-Cellular2/0/0] ipv6 address auto link-local
   [AR1-Cellular2/0/0] ipv6 address auto global
   ```
   c. 使能轮询DCC功能，配置自动拨号连接。
   ```
   [AR1] interface Cellular 2/0/0
   [AR1-Cellular2/0/0] dialer enable-circular
   [AR1-Cellular2/0/0] undo ip address negotiate
   [AR1-Cellular2/0/0] quit
   ```
   d. 配置NQA功能，探测5G链路的连通性。
   ```
   [AR1] nqa test-instance user test
   [AR1-nqa-user-test] test-type icmp
   [AR1-nqa-user-test] frequency 30
   [AR1-nqa-user-test] destination-address ipv6 240c::6666
   [AR1-nqa-user-test] start now
   [AR1-nqa-user-test] quit
   ```
   e. 在5G Cellular接口上绑定APN模板及NQA测试例。
   ```
   [AR1-Cellular2/0/0] apn-profile 5gprofile
   Info: The configuration will become effective after link reset.
   [AR1-Cellular2/0/0] modem auto-recovery track nqa user test probe-cycle seconds 30
   [AR1-Cellular2/0/0] modem auto-recovery track action modem-reboot fail-times 10
   mandatory
   [AR1-Cellular2/0/0] shutdown
   [AR1-Cellular2/0/0] undo shutdown
   [AR1-Cellular2/0/0] quit
   ```
2. 配置企业子网，为内部用户自动分配IPv6地址。

   # 配置分支子网，创建VLAN20，将GE0/0/1接口加入VLAN20。
   ```
   [AR1] vlan 20
   [AR1-vlan20] quit
   [AR1] interface GigabitEthernet 0/0/1
   [AR1-GigabitEthernet0/0/1] port link-type trunk
   ```

```
[AR1-GigabitEthernet0/0/1] port trunk allow-pass vlan 20
[AR1-GigabitEthernet0/0/1] quit
[AR1] interface vlanif 20
[AR1-Vlanif20] ipv6 enable
[AR1-Vlanif20] ipv6 address 280D::1/64
[AR1-Vlanif20] undo ipv6 nd ra halt
[AR1-Vlanif20] quit
```

3. 配置静态路由，使企业分支和总部的内网流量可以上行传输到Internet。

   # 配置分支的缺省路由，指定出接口为5G Cellular接口。

```
[AR1] ip route-static :: 0 cellular 2/0/0
```

验证

1. 在AR1上执行命令**display ipv6 interface brief**查看5G Cellular接口的详细信息，当接口上有流量传送时，可以看到接口获取到的IP地址，接口的物理状态和链路层协议状态都是Up。

```
<AR1> display ipv6 interface brief
*down: administratively down
(l): loopback
(s): spoofing
Interface                 Physical            Protocol
Cellular2/0/0               up                  up
[IPv6 Address] 2408:843E:C00:8E4:2E0:FC20:19:2020
```

2. 在AR1上执行命令**display cellular 2/0/0 all**查看5G数据卡的呼叫连接信息，可以看到APN为5gnet、无线网络类型为Automatic以及网络连接方式为5G(SA)。

```
<AR1> display Cellular 2/0/0 all
Modem State:
Hardware Information.
=====================
Model = RG801
Modem Type = 5G module
Modem Firmware Version = RG801HEAAAR03A03M8G
Hardware Version = HiB5000_MODEM Ver.A
Integrate circuit card identity (ICCID) = 89860120801472630356
International Mobile Subscriber Identity (IMSI) = 460012285508496
Mobile Station International ISDN Number (MSISDN) = None
International Mobile Equipment Identity (IMEI) = 867147050005231
Factory Serial Number (FSN) = 0123456789ABCDEF
Modem Status = Online
Profile Information.
====================
Profile 1
--------
PDP Type = IPv6, Header Compression = OFF
Data Compression = OFF
Access Point Name (APN) = 5gnet
Packet Session Status = Active
* - Default profile
Network Information.
====================
Current Service Status = Service available
Service Domain = Combined
Current Service = PS
Packet Service = Attached
Packet Session Status = Active
Current Roaming Status = Home
Network Selection Mode = Automatic
Network Connection Mode = Automatic
Current Network Connection = 5G(SA)
Mobile Country Code (MCC) = 460
Mobile Network Code (MNC) = 01
Mobile Operator Information = CHN-UNICOM
Tracking Area Code (TAC) = 13608193
Cell ID = 55740145665
```

```
Radio Information.
==================
Current Bands : AUTO
Current Band = N78
Current RSRP = -84 dBm (strong)
Current RSRQ = -10 dB
Current SINR = 18 dB
Bands supported :
  WCDMA: WCDMA850 WCDMA900 WCDMA2100
  FDD LTE: B1 B3 B5 B7 B8 B20 B28
  TDD LTE: B34 B38 B39 B40 B41
  FDD NR: N1 N3 N28
  TDD NR: N41 N77 N78 N79
Modem Security Information.
===========================
SIM ID = 1
PIN Verification = Disabled
PIN Status = Ready
Number of Retries remaining = 3
SIM Status = OK
```

配置脚本

AR1配置文件

```
#
 sysname AR1
#
ipv6
#
vlan batch 20
#
interface Vlanif20
 ipv6 enable
 ipv6 address 280D::1/64
 undo ipv6 nd ra halt
#
interface GigabitEthernet0/0/1
 port link-type trunk
 port trunk allow-pass vlan 20
#
interface Cellular2/0/0
 ipv6 enable
 dialer enable-circular
 apn-profile 5gprofile
 dialer timer autodial 10
 ipv6 address auto link-local
 ipv6 address auto global
 modem auto-recovery track nqa user test probe-cycle seconds 30
 modem auto-recovery track action modem-reboot fail-times 10 mandatory
 modem auto-recovery dial action modem-reboot fail-times 128
 modem auto-recovery icmp-unreachable action modem-reboot
 modem auto-recovery services-unavailable action modem-reboot test-times 0 interval 3600
#
apn profile 5gprofile
 apn 5gnet
#
ipv6 route-static :: 0 Cellular2/0/0
#
nqa test-instance user test
 test-type icmp
 destination-address ipv6 240C::6666
 frequency 30
 start now
#
return
```

7.1.3 配置企业通过 5G 双 DNN 同时接入 Internet 和 IMS 示例

场景介绍

在5G网络中，DNN（Data Network Name）等同于4G网络中的APN（Access Point Name）， 标识一个外部数据网络。用户可以在AR上配置DNN接入到相应的数据网络。AR1支持多DNN技术，每个DNN都可以会获取到独立的IP地址，不同DNN接入到不同的数据网络，例如DNN1接入Internet网络进行数据通信，DNN2接入到IMS数据网络进行VoIP语音通信。

由于AR2的5G功能同时兼容LTE和3G，虽然外部数据网络的概念在5G网络里叫做DNN，但配置还是沿用原来LTE和3G里的APN，所以举例里还是写配置APN。

组网需求

如图1所示，为了接入不同的网络，AR1的一个Cellular接口包含多个Cellular通道接口，每个Cellular通道接口等同于一个逻辑的业务接口，可以获取独立IP地址、并独立配置所要应用的业务，如语音、数据等。每个APN绑定一个Cellular通道接口，多个APN共用一个Cellular接口。路由器通过APN1接入Internet进行数据通信；通过APN2接入IMS网络进行VoIP语音通信。企业使用5G多APN进行数据通信和VoIP语音通信。

图 7-3 配置企业通过 5G 双 DNN 同时接入 Internet 和 IMS 组网图

数据准备

表 7-3 数据准备表

项目	数据	说明
运营商分配给企业分支的APN名称	5gnet、voicenet	APN名称需提前从运营商处获取。
运营商分配给分支的5G Cellular通道接口的IP地址	Cellular1/0/0:1接口：1.1.1.1/32 Cellular1/0/0:2接口：2.2.2.2/32	5G Cellular通道接口拨号接入运营商后，运营商给5G Cellular通道接口自动分配的IP地址。本例中，假设运营商为两个5G Cellular通道接口分配的IP地址分别为1.1.1.1和2.2.2.2。

项目	数据	说明
分支AR1 LAN侧接口信息	所属VLAN：10 网关地址：VLANIF10（10.1.1.1/24） LAN侧物理接口：GE0/0/1	VLAN 10为分支子网用户所在的VLAN，且分支子网用户的网关为VLANIF10接口。
总部语音业务所在的子网网段	10.2.1.0/24	总部语音业务所在的子网网段用于配置路由信息，使语言业务和数据业务走不同的路由。

配置思路

1. 创建两个APN模板，一个APN模板接入Internet，另一个APN模板接入IMS网络。
2. 在5G Cellular接口上使能多APN功能，并配置5G下行流量异常时发送ICMP报文检测DNS服务器是否可达。
3. 在5G Cellular通道接口上配置轮询DCC拨号连接，并绑定APN模板。
4. 配置分支内网，由AR1为该企业分支内网用户分配IP地址。
5. 配置NAT功能，指定5G Cellular通道接口的IP地址作为该企业分支公网地址。
6. 配置静态路由，指定出接口为5G Cellular通道接口，使数据业务和语音业务可以通过不同的5G Cellular通道接口上行传输到5G网络。

说明

在5G Cellular接口下执行命令**dialer enable-circular**配置轮询拨号功能时，设备会同时下发自动拨号、IP地址协商和5G Modem自愈的相关配置，无需再重复配置。

操作步骤

1. 配置APN模板

   # 配置APN模板5gnet，该模板用来接入Internet。

```
<Huawei> system-view
[Huawei] sysname AR1
[AR1] apn profile 5gnet
[AR1-apn-profile-5gnet] apn 5gnet
[AR1-apn-profile-5gnet] quit
```

   # 配置APN模板voicenet，该模板用来接入IMS网络。

```
[AR1] apn profile voicenet
[AR1-apn-profile-voicenet] apn voicenet
[AR1-apn-profile-voicenet] quit
```

2. 在5G Cellular接口上使能多APN功能。

```
[AR1] interface cellular 1/0/0
[AR1-Cellular1/0/0] multi-apn enable
[AR1-Cellular1/0/0] quit
```

3. 在5G Cellular通道接口上配置轮询DCC拨号连接，绑定APN模板。

   # 在5G Cellular通道接口1上配置轮询DCC拨号连接，绑定APN模板5gnet。

```
[AR1] interface cellular 1/0/0:1
[AR1-Cellular1/0/0:1] dialer enable-circular
[AR1-Cellular1/0/0:1] apn-profile 5gnet
```

```
[AR1-Cellular1/0/0:1] shutdown
[AR1-Cellular1/0/0:1] undo shutdown
[AR1-Cellular1/0/0:1] quit
```

在5G Cellular通道接口2上配置轮询DCC拨号连接，绑定APN模板voicenet。

```
[AR1] interface cellular 1/0/0:2
[AR1-Cellular1/0/0:2] dialer enable-circular
[AR1-Cellular1/0/0:2] apn-profile voicenet
[AR1-Cellular1/0/0:2] shutdown
[AR1-Cellular1/0/0:2] undo shutdown
[AR1-Cellular1/0/0:2] quit
```

4. 配置分支内网，为该企业分支内网用户分配IP地址。

创建VLAN10，将GE0/0/1接口加入VLAN10。

```
[AR1] vlan 10
[AR1-vlan10] quit
[AR1] interface GigabitEthernet 0/0/1
[AR1-GigabitEthernet0/0/1] port link-type access
[AR1-GigabitEthernet0/0/1] port default vlan 10
[AR1-GigabitEthernet0/0/1] quit
```

使能DHCP功能，并配置接口工作在接口地址池模式。

```
[AR1] dhcp enable
[AR1] interface Vlanif 10
[AR1-Vlanif10] ip address 10.1.1.1 255.255.255.0
[AR1-Vlanif10] dhcp select interface
[AR1-Vlanif10] quit
```

5. 配置NAT功能。

```
[AR1] acl number 3000
[AR1-acl-adv-3000] rule 5 permit ip
[AR1-acl-adv-3000] quit
[AR1] interface cellular 1/0/0:1
[AR1-Cellular1/0/0:1] nat outbound 3000
[AR1-Cellular1/0/0:1] quit
[AR1] interface cellular 1/0/0:2
[AR1-Cellular1/0/0:2] nat outbound 3000
[AR1-Cellular1/0/0:2] quit
```

6. 配置静态路由，数据业务走缺省路由，出接口为Cellular1/0/0:1；语音业务走另一条静态路由，出接口为Cellular1/0/0:2。

```
[AR1] ip route-static 0.0.0.0 0.0.0.0 Cellular 1/0/0:1
[AR1] ip route-static 10.2.1.0 255.255.255.0 Cellular 1/0/0:2
[AR1] quit
```

验证

1. 在AR1上执行命令**display ip interface brief Cellular 1/0/0:1**，查看Cellular1/0/0:1接口获取到的IP地址。

```
<AR1> display ip interface brief Cellular 1/0/0:1
*down: administratively down
^down: standby
(l): loopback
(s): spoofing
(E): E-Trunk down
Interface                    IP Address/Mask      Physical   Protocol

Cellular1/0/0:1                1.1.1.1/32         up         up
```

2. 在AR1上执行命令**display cellular 1/0/0 all**，查看Cellular1/0/0接口的状态信息。

```
<AR1> display Cellular 1/0/0 all
Modem State:
Hardware Information.
=====================
Model = RG801
Modem Type = 5G module
```

```
Modem Firmware Version = RG801HEAAAR01A07M8G
Hardware Version = HiB5000_MODEM Ver.A
Integrate circuit card identity (ICCID) = 98681020100202000069
International Mobile Subscriber Identity (IMSI) = 460070075591996
Mobile Station International ISDN Number (MSISDN) = None
International Mobile Equipment Identity (IMEI) = 867147050004457
Factory Serial Number (FSN) = 0123456789ABCDEF
Modem Status = Online
Profile Information.
====================
Profile 1
--------
PDP Type = IPv4, Header Compression = OFF
Data Compression = OFF
Access Point Name (APN) = 5gnet
Packet Session Status = Active
* - Default profile
Network Information.
====================
Current Service Status = Service available
Service Domain = Combined
Current Service = PS
Packet Service = Attached
Packet Session Status = Active
Current Roaming Status = Roaming
Network Selection Mode = Automatic
Network Connection Mode = LTE-NR
Current Network Connection = 5G(NSA)
Mobile Country Code (MCC) = 369
Mobile Network Code (MNC) = 77
Mobile Operator Information = Unknown
Tracking Area Code (TAC) = 1002
Cell ID = 9881858
Radio Information.
==================
Current Bands :
  WCDMA: AUTO
  LTE: B3
  NR: AUTO
LTE:
Current Band = B3
Current RSSI >= -51 dBm
Current RSRP = -71 dBm (strong)
Current RSRQ = -6 dB
Current SINR = 6 dB
NR:
Current Band = N78
Current RSRP = -65 dBm (strong)
Current RSRQ = -10 dB
Current SINR = 38 dB
Bands supported :
  WCDMA: WCDMA850 WCDMA900 WCDMA2100
  FDD LTE: B1 B3 B5 B7 B8 B20 B28
  TDD LTE: B34 B38 B39 B40 B41
  FDD NR: N1 N3 N28
  TDD NR: N41 N77 N78 N79
Modem Security Information.
===========================
SIM ID = 1
PIN Verification = Disabled
PIN Status = Ready
Number of Retries remaining = 3
SIM Status = OK
```

配置文件

AR1配置文件

```
#
 sysname AR1
```

```
#
vlan batch 10
#
dhcp enable
#
acl number 3000
 rule 5 permit ip
#
interface Vlanif10
 ip address 10.1.1.1 255.255.255.0
 dhcp select interface
#
interface GigabitEthernet0/0/1
 port link-type access
 port default vlan 10
#
interface Cellular1/0/0
 multi-apn enable
 modem auto-recovery icmp-unreachable action modem-reboot
#
interface Cellular1/0/0:1
 dialer enable-circular
 apn-profile 5gnet
 dialer timer autodial 10
 nat outbound 3000
 modem auto-recovery dial action modem-reboot fail-times 128
 modem auto-recovery services-unavailable action modem-reboot test-times 0 interval 3600
 ip address negotiate
#
interface Cellular1/0/0:2
 dialer enable-circular
 apn-profile voicenet
 dialer timer autodial 10
 nat outbound 3000
 modem auto-recovery dial action modem-reboot fail-times 128
 modem auto-recovery services-unavailable action modem-reboot test-times 0 interval 3600
 ip address negotiate
#
apn profile 5gnet
 apn 5gnet
apn profile voicenet
 apn voicenet
#
ip route-static 0.0.0.0 0.0.0.0 Cellular1/0/0:1
ip route-static 10.2.1.0 255.255.255.0 Cellular1/0/0:2
#
return
```

7.2 5G2B 专线场景

7.2.1 配置分支使用 5G 链路和总部建立 GRE 隧道互联示例

场景介绍

VPN是一种解决企业分支和总部之间通过公有网络实现私有数据通信的技术。VPN在企业分支和总部之间，跨公有网络建立一个私有的、专用的虚拟通信隧道，实现分支和总部之间跨公网的私有通信。VPN由于安全、可靠、可信赖、灵活、价格便宜等众多优势，在企业网络中得到广泛应用。VPN加上5G链路的大带宽、低时延、易部署等优点，更能满足远程用户、企业分支和企业总部之间快速、安全、高效的互联需求。

企业分支通过5G链路接入到Internet，然后与企业总部建立VPN，使得分支可以通过Internet接入总部。根据企业分支和总部之间的业务诉求，可以在5G链路上建立不同的VPN隧道。例如GRE是一种三层隧道封装技术，当企业分支和总部之间需要交互三

层业务时，可以在总部和分支之间建立GRE隧道，转发分支和总部之间的L3业务流量，满足企业分支用户快速、安全、高效接入总部的需求。

组网需求

如图1所示，企业分支和总部之间通过Internet网络互通。企业分支使用AR1企业路由器作为出口网关，AR1企业路由器通过5G链路接入Internet。企业分支和总部之间在5G链路上构建GRE隧道，转发它们之间的三层流量。

图 7-4 配置分支使用 5G 链路和总部建立 GRE 隧道互联组网图

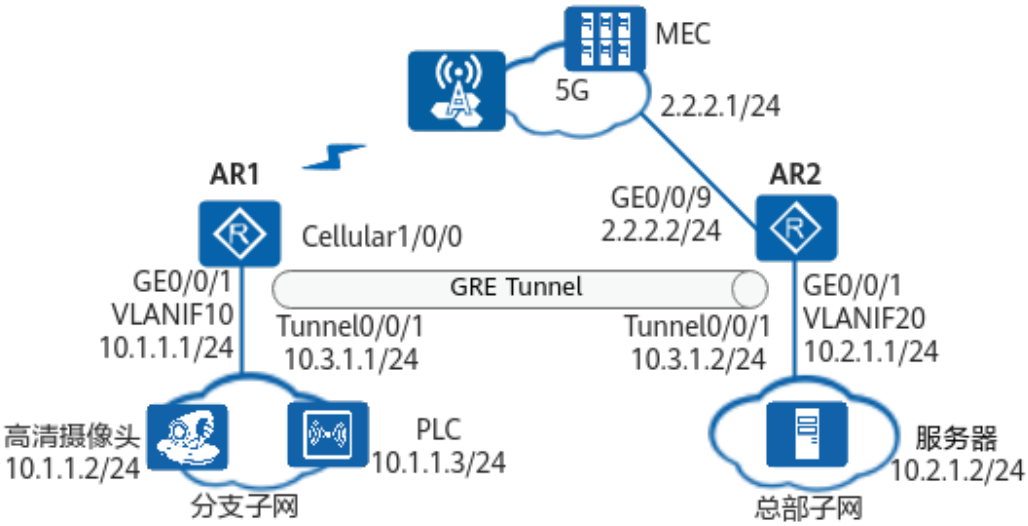

数据准备

表 7-4 数据准备表

项目	数据	说明
运营商给分支分配的APN名称	5gnet	APN名称需提前从运营商处获取。
运营商给分支5G Cellular接口分配的IP地址	1.1.1.1/32	5G Cellular接口拨号接入运营商后，运营商给5G Cellular接口自动分配的IP地址。 **说明** 使用GRE隧道时，要求运营商给5G Cellular接口分配的IP地址为固定IP地址。本例中，假设运营商为5G Cellular接口分配的固定IP地址为1.1.1.1。
运营商给总部GE0/0/9接口分配的IP地址	2.2.2.2/24	总部AR2通过有线的方式接入Internet，该有线接口GE0/0/9采用静态方式配置IP地址。
运营商对接总部GE0/0/9接口的IP地址	2.2.2.1/24	运营商对接总部AR2 GE0/0/9接口的IP地址用于配置路由信息，使总部和Internet之间的路由互通。

项目	数据	说明
分支AR1 LAN侧接口信息	所属VLAN：10 网关地址：VLANIF10（10.1.1.1/24） LAN侧物理接口：GE0/0/1	VLAN 10为分支子网用户所在的VLAN，且分支子网用户的网关为VLANIF10接口。
总部AR2 LAN侧接口信息	所属VLAN：20 网关地址：VLANIF20（10.2.1.1/24） LAN侧物理接口：GE0/0/1	VLAN 20为总部子网用户所在的VLAN，且总部子网用户的网关为VLANIF20接口。
分支AR1 Tunnel接口的IP地址	10.3.1.1/24	分支GRE隧道的地址。
总部AR2 Tunnel接口的IP地址	10.3.1.2/24	总部GRE隧道的地址。

TCP MSS 参数配置说明

为了减少网络传输中不必要的分片和重组，网络规划时需要合理设置终端发出的报文大小。对于TCP报文，可以配置5G AR设备的TCP MSS值，通过修改应用层报文数据包的长度来避免报文分片。在5G 2B专线场景中，TCP MSS取值比较简单，在隧道两端AR设备的LAN侧接入物理口或VLANIF口上配置TCP MSS为推荐值1200。

配置思路

1. 配置5G Cellular接口的连接参数，实现5G Cellular接口接入5G网络。
2. 配置企业子网，为内部用户自动分配IP地址。
3. 配置Tunnel接口，创建GRE隧道，使分支和总部之间的业务流量通过GRE隧道传输。
4. 配置静态路由，使企业分支和总部子网的用户可以互通。

说明

在5G Cellular接口下执行命令**dialer enable-circular**配置轮询拨号功能时，设备会同时下发自动拨号、IP地址协商和5G Modem自愈的相关配置，无需再重复配置。

操作步骤

1. 配置5G Cellular接口的连接参数，实现5G Cellular接口接入5G网络。
   a. 创建APN模板。

```
<Huawei> system-view
[Huawei] sysname AR1
[AR1] apn profile 5gprofile
[AR1-apn-profile-5gprofile] apn 5gnet
[AR1-apn-profile-5gprofile] quit
```

b. 使能轮询DCC功能，配置自动拨号连接。

```
[AR1] interface Cellular 1/0/0
[AR1-Cellular1/0/0] dialer enable-circular
```

c. 在5G Cellular接口上绑定APN模板。

```
[AR1-Cellular1/0/0] apn-profile 5gprofile
Info: The configuration will become effective after link reset.
[AR1-Cellular1/0/0] shutdown
[AR1-Cellular1/0/0] undo shutdown
[AR1-Cellular1/0/0] quit
```

2. 配置企业子网，为内部用户自动分配IP地址。

a. 配置分支子网，创建VLAN10，将GE0/0/1接口加入VLAN10。配置VLANIF 10接口TCP最大报文段长度为1200字节并配置DHCP功能。

```
[AR1] vlan 10
[AR1-vlan10] quit
[AR1] interface GigabitEthernet 0/0/1
[AR1-GigabitEthernet0/0/1] port link-type access
[AR1-GigabitEthernet0/0/1] port default vlan 10
[AR1-GigabitEthernet0/0/1] quit
[AR1] dhcp enable
[AR1] interface Vlanif 10
[AR1-Vlanif10] ip address 10.1.1.1 24
[AR1-Vlanif10] dhcp select interface
[AR1-Vlanif10] tcp adjust-mss 1200
[AR1-Vlanif10] quit
```

b. 配置总部子网，创建VLAN20，将GE0/0/1接口加入VLAN20。配置VLANIF 20接口TCP最大报文段长度为1200字节并配置DHCP功能。

```
<Huawei> system-view
[Huawei] sysname AR2
[AR2] vlan 20
[AR2-vlan20] quit
[AR2] interface GigabitEthernet 0/0/1
[AR2-GigabitEthernet0/0/1] port link-type access
[AR2-GigabitEthernet0/0/1] port default vlan 20
[AR2-GigabitEthernet0/0/1] quit
[AR2] dhcp enable
[AR2] interface Vlanif 20
[AR2-Vlanif20] ip address 10.2.1.1 24
[AR2-Vlanif20] dhcp select interface
[AR2-Vlanif20] tcp adjust-mss 1200
[AR2-Vlanif20] quit
```

3. 配置Tunnel接口，创建GRE隧道。

a. 配置总部WAN侧接口GE0/0/9的IP地址。

```
[AR2] interface GigabitEthernet 0/0/9
[AR2-GigabitEthernet0/0/9] ip address 2.2.2.2 24
[AR2-GigabitEthernet0/0/9] quit
```

b. 配置总部的Tunnel接口。

```
[AR2] interface Tunnel0/0/1
[AR2-Tunnel0/0/1] tunnel-protocol gre
Warning: After this tunnel encapsulation protocol was configured, the MTU and other
parameter settings of the tunnel were deleted.
[AR2-Tunnel0/0/1] ip address 10.3.1.2 255.255.255.0
[AR2-Tunnel0/0/1] source GigabitEthernet 0/0/9
[AR2-Tunnel0/0/1] destination 1.1.1.1
[AR2-Tunnel0/0/1] quit
```

c. 配置分支的Tunnel接口。

```
[AR1] interface Tunnel0/0/1
[AR1-Tunnel0/0/1] tunnel-protocol gre
Warning: After this tunnel encapsulation protocol was configured, the MTU and other
parameter settings of the tunnel were deleted.
[AR1-Tunnel0/0/1] ip address 10.3.1.1 255.255.255.0
[AR1-Tunnel0/0/1] source Cellular 1/0/0
[AR1-Tunnel0/0/1] destination 2.2.2.2
[AR1-Tunnel0/0/1] quit
```

4. 配置静态路由，使企业分支和总部子网的用户可以互通。
   a. 配置两条分支静态路由，一条静态路由的出接口为5G Cellular1/0/0，一条静态路由的出接口为Tunnel0/0/1。
   ```
   [AR1] ip route-static 2.2.2.2 32 Cellular 1/0/0
   [AR1] ip route-static 10.2.1.0 255.255.255.0 Tunnel 0/0/1
   [AR1] quit
   ```
   b. 配置两条总部静态路由，一条静态路由的下一跳地址为对端运营商接口的IP地址，一条静态路由的出接口为Tunnel0/0/1。
   ```
   [AR2] ip route-static 1.1.1.0 255.255.255.0 2.2.2.1
   [AR2] ip route-static 10.1.1.0 255.255.255.0 Tunnel 0/0/1
   [AR2] quit
   ```

验证

1. 在AR1上执行命令**display ip interface brief Cellular 1/0/0**，查看Cellular1/0/0接口获取到的IP地址。
   ```
   <AR1> display ip interface brief Cellular 1/0/0
   *down: administratively down
   ^down: standby
   (l): loopback
   (s): spoofing
   (E): E-Trunk down
   Interface                    IP Address/Mask      Physical   Protocol

   Cellular1/0/0                 1.1.1.1/32          up         up
   ```
2. 在AR1上执行命令**display Cellular 1/0/0 all**，查看Cellular1/0/0接口的状态信息。
   ```
   <AR1> display Cellular 1/0/0 all
   Modem State:
   Hardware Information.
   =====================
   Model = RG801
   Modem Type = 5G module
   Modem Firmware Version = RG801HEAAAR01A07M8G
   Hardware Version = HiB5000_MODEM Ver.A
   Integrate circuit card identity (ICCID) = 98681020100202000069
   International Mobile Subscriber Identity (IMSI) = 460070075591996
   Mobile Station International ISDN Number (MSISDN) = None
   International Mobile Equipment Identity (IMEI) = 867147050004457
   Factory Serial Number (FSN) = 0123456789ABCDEF
   Modem Status = Online
   Profile Information.
   ====================
   Profile 1
   --------
   PDP Type = IPv4, Header Compression = OFF
   Data Compression = OFF
   Access Point Name (APN) = 5gnet
   Packet Session Status = Active
   * - Default profile
   Network Information.
   ====================
   Current Service Status = Service available
   Service Domain = Combined
   Current Service = PS
   Packet Service = Attached
   Packet Session Status = Active
   Current Roaming Status = Roaming
   Network Selection Mode = Automatic
   Network Connection Mode = LTE-NR
   Current Network Connection = 5G(NSA)
   Mobile Country Code (MCC) = 369
   Mobile Network Code (MNC) = 77
   Mobile Operator Information = Unknown
   Tracking Area Code (TAC) = 1002
   ```

```
Cell ID = 9881858
Radio Information.
==================
Current Bands :
  WCDMA: AUTO
  LTE: B3
  NR: AUTO
LTE:
Current Band = B3
Current RSSI >= -51 dBm
Current RSRP = -71 dBm (strong)
Current RSRQ = -6 dB
Current SINR = 6 dB
NR:
Current Band = N78
Current RSRP = -65 dBm (strong)
Current RSRQ = -10 dB
Current SINR = 38 dB
Bands supported :
  WCDMA: WCDMA850 WCDMA900 WCDMA2100
  FDD LTE: B1 B3 B5 B7 B8 B20 B28
  TDD LTE: B34 B38 B39 B40 B41
  FDD NR: N1 N3 N28
  TDD NR: N41 N77 N78 N79
Modem Security Information.
===========================
SIM ID = 1
PIN Verification = Disabled
PIN Status = Ready
Number of Retries remaining = 3
SIM Status = OK
```

3. 在AR1上执行命令**ping -a 10.1.1.1 10.2.1.1**，模拟分支用户访问总部用户的流量，流量能Ping通。

```
<AR1> ping -a 10.1.1.1 10.2.1.1
  PING 10.2.1.1: 56  data bytes, press CTRL_C to break
    Reply from 10.2.1.1: bytes=56 Sequence=1 ttl=255 time=51 ms
    Reply from 10.2.1.1: bytes=56 Sequence=2 ttl=255 time=35 ms
    Reply from 10.2.1.1: bytes=56 Sequence=3 ttl=255 time=45 ms
    Reply from 10.2.1.1: bytes=56 Sequence=4 ttl=255 time=40 ms
    Reply from 10.2.1.1: bytes=56 Sequence=5 ttl=255 time=37 ms

  --- 10.2.1.1 ping statistics ---
    5 packet(s) transmitted
    5 packet(s) received
    0.00% packet loss
    round-trip min/avg/max = 35/41/51 ms
```

配置文件

AR1配置文件

```
#
 sysname AR1
#
vlan batch 10
#
dhcp enable
#
interface Vlanif10
 ip address 10.1.1.1 255.255.255.0
 dhcp select interface
 tcp adjust-mss 1200
#
interface GigabitEthernet0/0/1
 port link-type access
 port default vlan 10
#
interface Cellular1/0/0
 dialer enable-circular
```

```
 apn-profile 5gprofile
 dialer timer autodial 10
 modem auto-recovery dial action modem-reboot fail-times 128
 modem auto-recovery icmp-unreachable action modem-reboot
 modem auto-recovery services-unavailable action modem-reboot test-times 0 interval 3600
 ip address negotiate
#
interface Tunnel0/0/1
 ip address 10.3.1.1 255.255.255.0
 tunnel-protocol gre
 source Cellular1/0/0
 destination 2.2.2.2
#
apn profile 5gprofile
 apn 5gnet
#
ip route-static 2.2.2.2 255.255.255.255 Cellular1/0/0
ip route-static 10.2.1.0 255.255.255.0 Tunnel0/0/1
#
return
```

AR2配置文件

```
#
 sysname AR2
#
vlan batch 20
#
dhcp enable
#
interface Vlanif20
 ip address 10.2.1.1 255.255.255.0
 dhcp select interface
 tcp adjust-mss 1200
#
interface GigabitEthernet0/0/1
 port link-type access
 port default vlan 20
#
interface GigabitEthernet0/0/9
 ip address 2.2.2.2 255.255.255.0
#
interface Tunnel0/0/1
 ip address 10.3.1.2 255.255.255.0
 tunnel-protocol gre
 source GigabitEthernet0/0/9
 destination 1.1.1.1
#
ip route-static 1.1.1.0 255.255.255.0 2.2.2.1
ip route-static 10.1.1.0 255.255.255.0 Tunnel0/0/1
#
return
```

7.2.2 配置分支使用 5G 链路和总部建立 IPSec 加密隧道示例

场景介绍

企业分支通过5G链路接入到Internet，然后与企业总部建立VPN，使得分支可以通过Internet接入总部。根据企业分支和总部之间的业务诉求，可以在5G链路上建立不同的VPN隧道，例如GRE、L2TP、IPSec VPN、DSVPN。其中，IPSec VPN隧道可以对链路上传输的数据进行加密，防止数据被拦截或篡改，非常适用于那些业务安全性和保密性要求较高的行业，例如金融的离行ATM、政府机构等。

组网需求

如图1所示，企业分支使用AR1企业路由器作为出口网关，AR2企业路由器通过5G链路接入Internet，企业分支和总部在5G链路上通过配置IPSec实现企业分支与总部的业务安全互通，对互相访问的流量进行安全保护。

图 7-5 配置分支使用 5G 链路和总部建立 IPSec 加密隧道组网图

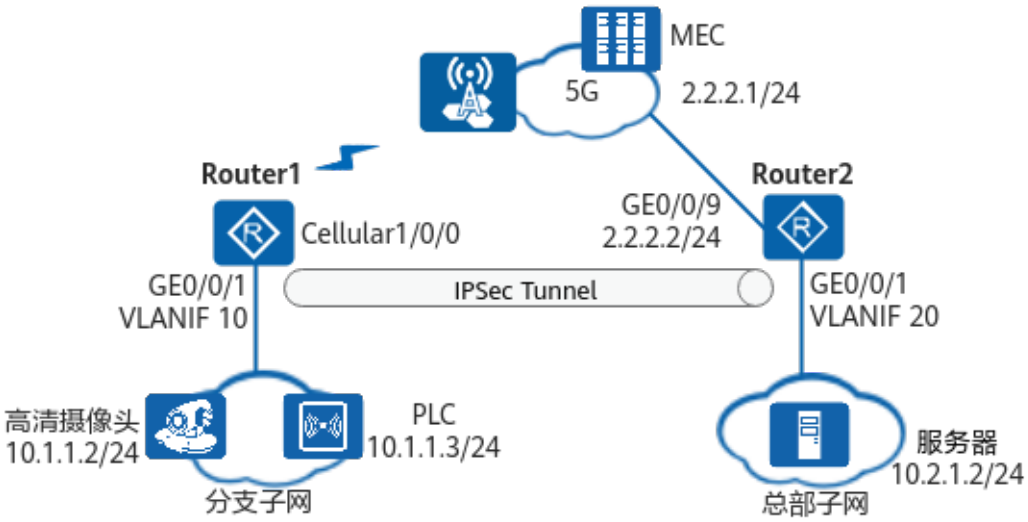

数据准备

表 7-5 数据准备表

项目	数据	说明
运营商分配给企业分支的APN名称	5gnet	APN名称需提前从运营商处获取。
运营商分配给分支的5G Cellular接口的IP地址	1.1.1.1/32	5G Cellular接口拨号接入运营商后，运营商给5G Cellular接口自动分配的IP地址。
运营商分配给总部的GE0/0/9接口的IP地址	2.2.2.2/24	总部AR2通过有线的方式接入Internet，该有线接口GE0/0/9采用静态方式获取IP地址。
分支AR1 LAN侧接口信息	VLAN：10 VLANIF10：10.1.1.1	VLAN 10为分支子网用户所在的VLAN，且分支子网用户的网关为VLANIF10接口。
总部AR2 LAN侧接口信息	VLAN：20 VLANIF20：10.2.1.1	VLAN 20为总部子网用户所在的VLAN，且总部子网用户的网关为VLANIF20接口。
总部AR2对端运营商接口的IP地址	2.2.2.1/24	总部AR2对端运营商接口的IP地址用于配置路由信息，使分支和总部之间的路由互通。

TCP MSS 参数配置说明

为了减少网络传输中不必要的分片和重组，网络规划时需要合理设置终端发出的报文大小。对于TCP报文，可以配置5G AR设备的TCP MSS值，通过修改应用层报文数据包的长度来避免报文分片。在5G 2B专线场景中，TCP MSS取值比较简单，在隧道两端AR设备的LAN侧接入物理口或VLANIF口上配置TCP MSS为推荐值1200。

配置思路

1. 配置5G Cellular接口的连接参数，实现5G Cellular接口接入5G网络。
2. 配置企业子网，为内部用户自动分配IP地址。
3. 配置分支NAT功能，实现分支的内部用户可以访问Internet。
4. 配置ACL，以定义IPSec保护的数据流。
5. 配置IPSec安全提议，定义IPSec的保护方法。
6. 配置IKE对等体，定义对等体间IKE协商时的属性。
7. 配置安全策略，确定对何种数据流采取何种保护方法。其中总部AR采用策略模板方式创建安全策略。
8. 在接口上应用安全策略组，使接口具有IPSec的保护功能。
9. 配置静态路由，使企业分支和总部的内网流量可以上行传输到Internet.

说明

自动拨号和按需拨号只需配置一种即可，即如果执行命令**dialer enable-circular**配置自动拨号，设备会自动配置拨号串和IP地址协商，则无需再配置拨号控制列表进行按需拨号。

操作步骤

1. 配置5G Cellular接口的连接参数，实现5G Cellular接口接入5G网络。
   a. 创建APN模板。
   ```
   <Huawei> system-view
   [Huawei] sysname AR1
   [AR1] apn profile 5gprofile
   [AR1-apn-profile-5gprofile] apn 5gnet
   [AR1-apn-profile-5gprofile] quit
   ```
   b. 使能轮询DCC功能，配置自动拨号连接。
   ```
   [AR1] interface Cellular 1/0/0
   [AR1-Cellular1/0/0] dialer enable-circular
   ```
   c. 在5G Cellular接口上绑定APN模板。
   ```
   [AR1-Cellular1/0/0] apn-profile 5gprofile
   Info: The configuration will become effective after link reset.
   [AR1-Cellular1/0/0] shutdown
   [AR1-Cellular1/0/0] undo shutdown
   [AR1-Cellular1/0/0] quit
   ```
2. 配置企业子网，为内部用户自动分配IP地址。
   a. 配置分支子网，创建VLAN10，将GE0/0/1接口加入VLAN10。配置VLANIF 10接口TCP最大报文段长度为1200字节并配置DHCP功能。
   ```
   [AR1] vlan 10
   [AR1-vlan10] quit
   [AR1] interface GigabitEthernet 0/0/1
   [AR1-GigabitEthernet0/0/1] port link-type access
   [AR1-GigabitEthernet0/0/1] port default vlan 10
   [AR1-GigabitEthernet0/0/1] quit
   [AR1] dhcp enable
   [AR1] interface Vlanif 10
   [AR1-Vlanif10] ip address 10.1.1.1 24
   ```

```
[AR1-Vlanif10] dhcp select interface
[AR1-Vlanif10] tcp adjust-mss 1200
[AR1-Vlanif10] quit
```

b. 配置总部子网，创建VLAN20，将GE0/0/1接口加入VLAN20。配置VLANIF 20接口TCP最大报文段长度为1200字节并配置DHCP功能。

```
<Huawei> system-view
[Huawei] sysname AR2
[AR2] vlan 20
[AR2-vlan20] quit
[AR2] interface GigabitEthernet 0/0/1
[AR2-GigabitEthernet0/0/1] port link-type access
[AR2-GigabitEthernet0/0/1] port default vlan 20
[AR2-GigabitEthernet0/0/1] quit
[AR2] dhcp enable
[AR2] interface Vlanif 20
[AR2-Vlanif20] ip address 10.2.1.1 24
[AR2-Vlanif20] dhcp select interface
[AR2-Vlanif20] tcp adjust-mss 1200
[AR2-Vlanif20] quit
```

3. 配置分支NAT功能

```
[AR1] acl number 3000
[AR1-acl-adv-3000] rule 5 deny ip destination 10.2.1.0 0.0.0.255
[AR1-acl-adv-3000] rule 10 permit ip
[AR1-acl-adv-3000] quit
[AR1] interface Cellular 1/0/0
[AR1-Cellular1/0/0] nat outbound 3000
[AR1-Cellular1/0/0] quit
```

4. 配置总部接口IP地址。

```
[AR2] interface gigabitethernet 0/0/9
[AR2-GigabitEthernet0/0/9] ip address 2.2.2.2 255.255.255.0
[AR2-GigabitEthernet0/0/9] quit
```

5. 配置ACL，定义各自要保护的数据流。

配置分支ACL，定义由子网10.1.1.0/24去子网10.2.1.0/24的数据流。

```
[AR1] acl number 3101
[AR1-acl-adv-3101] rule permit ip destination 10.2.1.0 0.0.0.255
[AR1-acl-adv-3101] quit
```

配置总部ACL，定义由子网10.2.1.0/24去子网10.1.1.0/24的数据流。

```
[AR2] acl number 3101
[AR2-acl-adv-3101] rule permit ip source 10.2.1.0 0.0.0.255
[AR2-acl-adv-3101] quit
```

6. 配置IPSec安全提议。

配置分支IPSec安全提议。

```
[AR1] ipsec proposal tran1
[AR1-ipsec-proposal-tran1] esp authentication-algorithm sha2-256
[AR1-ipsec-proposal-tran1] esp encryption-algorithm aes-128
[AR1-ipsec-proposal-tran1] quit
```

配置总部IPSec安全提议。

```
[AR2] ipsec proposal tran1
[AR2-ipsec-proposal-tran1] esp authentication-algorithm sha2-256
[AR2-ipsec-proposal-tran1] esp encryption-algorithm aes-128
[AR2-ipsec-proposal-tran1] quit
```

7. 配置IKE对等体。

a. 配置分支IKE安全提议。

```
[AR1] ike proposal 5
[AR1-ike-proposal-5] authentication-algorithm sha2-256
[AR1-ike-proposal-5] encryption-algorithm aes-128
[AR1-ike-proposal-5] dh group14
[AR1-ike-proposal-5] quit
```

b. 配置分支IKE对等体。

```
[AR1] ike peer spub
[AR1-ike-peer-spub] ike-proposal 5
```

```
[AR1-ike-peer-spub] pre-shared-key cipher YsHsjx_202206
[AR1-ike-peer-spub] remote-address 2.2.2.2
[AR1-ike-peer-spub] quit
```

c. 配置总部IKE安全提议。

```
[AR2] ike proposal 5
[AR2-ike-proposal-5] authentication-algorithm sha2-256
[AR2-ike-proposal-5] encryption-algorithm aes-128
[AR2-ike-proposal-5] dh group14
[AR2-ike-proposal-5] quit
```

d. 配置总部IKE对等体。

```
[AR2] ike peer spua
[AR2-ike-peer-spua] ike-proposal 5
[AR2-ike-peer-spua] pre-shared-key cipher YsHsjx_202206
[AR2-ike-peer-spua] remote-address 1.1.1.1
[AR2-ike-peer-spua] quit
```

8. 配置安全策略。

a. 配置分支IKE动态协方式安全策略。

```
[AR1] ipsec policy policy1 10 isakmp
[AR1-ipsec-policy-isakmp-policy1-10] proposal tran1
[AR1-ipsec-policy-isakmp-policy1-10] ike-peer spub
[AR1-ipsec-policy-isakmp-policy1-10] security acl 3101
[AR1-ipsec-policy-isakmp-policy1-10] quit
```

b. 配置总部以策略模板方式配置IKE动态协商方式安全策略。

```
[AR2] ipsec policy policy1 10 isakmp
[AR2-ipsec-policy-templet-use1-10] proposal tran1
[AR2-ipsec-policy-templet-use1-10] ike-peer spua
[AR2-ipsec-policy-templet-use1-10] security acl 3101
[AR2-ipsec-policy-templet-use1-10] quit
```

9. 配置分支和总部在接口上应用各自的安全策略组，使接口具有IPSec的保护功能。

a. 在分支接口上应用安全策略组。

```
[AR1] interface cellular 1/0/0
[AR1-Cellular1/0/0] ipsec policy policy1
[AR1-Cellular1/0/0] quit
```

b. 在总部接口上应用安全策略组。

```
[AR2] interface gigabitethernet 0/0/9
[AR2-GigabitEthernet0/0/9] ipsec policy policy1
[AR2-GigabitEthernet0/0/9] quit
```

10. 配置静态路由，使企业分支和总部的内网流量可以上行传输到Internet。

配置分支的缺省路由，指定出接口为5G Cellular接口。

```
[AR1] ip route-static 0.0.0.0 0.0.0.0 cellular 1/0/0
```

配置总部的路由参数，确保企业总部与企业分支用户网络互通。

```
[AR2] ip route-static 0.0.0.0 0.0.0.0 2.2.2.1
```

验证

1. 分别在AR1和AR2上执行**display ike sa**会显示所配置的信息，以AR1为例。

```
[AR1] display ike sa
 Conn-ID    Peer                                VPN            Flag(s)             Phase  RemoteType
RemoteID
-------------------------------------------------------------------------------------------------------------------------------
-------------
 16         2.1.1.1:500                                        RD|ST               v1:2   IP         2.1.1.1
 14         2.1.1.1:500                                        RD|ST               v1:1   IP
2.1.1.1
  Number of IKE SA : 2
-------------------------------------------------------------------------------------------------------------------------------
-------------

 Flag Description:
 RD--READY   ST--STAYALIVE   RL--REPLACED   FD--FADING   TO--
```

```
TIMEOUT
 HRT--HEARTBEAT   LKG--LAST KNOWN GOOD SEQ NO.   BCK--BACKED
UP
 M--ACTIVE   S--STANDBY   A--ALONE  NEG--NEGOTIATING
```

2. 在AR1上执行命令**display ip interface brief Cellular 1/0/0**，查看Cellular1/0/0接口获取到的IP地址。

```
<AR1> display ip interface brief Cellular 1/0/0
*down: administratively down
^down: standby
(l): loopback
(s): spoofing
(E): E-Trunk down
Interface                      IP Address/Mask      Physical   Protocol

Cellular1/0/0                   1.1.1.1/32          up         up
```

3. 在AR1上执行命令**display Cellular 1/0/0 all**，查看Cellular1/0/0接口的状态信息。

```
<AR1> display Cellular 1/0/0 all
Modem State:
Hardware Information.
=====================
Model = RG801
Modem Type = 5G module
Modem Firmware Version = RG801HEAAAR01A07M8G
Hardware Version = HiB5000_MODEM Ver.A
Integrate circuit card identity (ICCID) = 98681020100202000069
International Mobile Subscriber Identity (IMSI) = 460070075591996
Mobile Station International ISDN Number (MSISDN) = None
International Mobile Equipment Identity (IMEI) = 867147050004457
Factory Serial Number (FSN) = 0123456789ABCDEF
Modem Status = Online
Profile Information.
====================
Profile 1
--------
PDP Type = IPv4, Header Compression = OFF
Data Compression = OFF
Access Point Name (APN) = 5gnet
Packet Session Status = Active
* - Default profile
Network Information.
====================
Current Service Status = Service available
Service Domain = Combined
Current Service = PS
Packet Service = Attached
Packet Session Status = Active
Current Roaming Status = Roaming
Network Selection Mode = Automatic
Network Connection Mode = LTE-NR
Current Network Connection = 5G(NSA)
Mobile Country Code (MCC) = 369
Mobile Network Code (MNC) = 77
Mobile Operator Information = Unknown
Tracking Area Code (TAC) = 1002
Cell ID = 9881858
Radio Information.
==================
Current Bands :
  WCDMA: AUTO
  LTE: B3
  NR: AUTO
LTE:
Current Band = B3
Current RSSI >= -51 dBm
Current RSRP = -71 dBm (strong)
Current RSRQ = -6 dB
Current SINR = 6 dB
```

```
NR:
Current Band = N78
Current RSRP = -65 dBm (strong)
Current RSRQ = -10 dB
Current SINR = 38 dB
Bands supported :
  WCDMA: WCDMA850 WCDMA900 WCDMA2100
  FDD LTE: B1 B3 B5 B7 B8 B20 B28
  TDD LTE: B34 B38 B39 B40 B41
  FDD NR: N1 N3 N28
  TDD NR: N41 N77 N78 N79
Modem Security Information.
==========================
SIM ID = 1
PIN Verification = Disabled
PIN Status = Ready
Number of Retries remaining = 3
SIM Status = OK
```

4. 在AR1上执行命令**ping -a 10.1.1.1 10.2.1.1**，模拟分支用户访问总部用户的流量，流量能Ping通。

```
<AR1> ping -a 10.1.1.1 10.2.1.1
  PING 10.2.1.1: 56  data bytes, press CTRL_C to break
    Reply from 10.2.1.1: bytes=56 Sequence=1 ttl=255 time=51 ms
    Reply from 10.2.1.1: bytes=56 Sequence=2 ttl=255 time=35 ms
    Reply from 10.2.1.1: bytes=56 Sequence=3 ttl=255 time=45 ms
    Reply from 10.2.1.1: bytes=56 Sequence=4 ttl=255 time=40 ms
    Reply from 10.2.1.1: bytes=56 Sequence=5 ttl=255 time=37 ms

  --- 10.2.1.1 ping statistics ---
    5 packet(s) transmitted
    5 packet(s) received
    0.00% packet loss
    round-trip min/avg/max = 35/41/51 ms
```

配置脚本

AR1配置文件

```
#
 sysname AR1
#
vlan batch 10
#
dhcp enable
#
acl number 3000
 rule 5 deny ip destination 10.2.1.0 0.0.0.255
rule 10 permit ip
acl number 3101
 rule permit ip destination 10.2.1.0 0.0.0.255
#
interface Vlanif10
 ip address 10.1.1.1 255.255.255.0
 dhcp select interface
 tcp adjust-mss 1200
#
interface GigabitEthernet0/0/1
 port link-type access
 port default vlan 10
#
ipsec proposal tran1
 esp authentication-algorithm sha2-256
 esp encryption-algorithm aes-128
#
ike proposal 5
 encryption-algorithm aes-128
 dh group14
 authentication-algorithm sha2-256
#
```

```
ike peer spub
 pre-shared-key cipher %^%#JvZxR2g8c;a9~FPN~n'$7`DEV&=G(=Et02P/%\*!%^%#
 remote-address 2.2.2.2
 ike-proposal 5
#
ipsec policy policy1 10 isakmp
 security acl 3101
 ike-peer spub
 proposal tran1
#
interface Cellular1/0/0
 dialer enable-circular
 apn-profile 5gprofile
 dialer timer autodial 10
 nat outbound 3000
 modem auto-recovery dial action modem-reboot fail-times 128
 modem auto-recovery icmp-unreachable action modem-reboot
 modem auto-recovery services-unavailable action modem-reboot test-times 0 interval 3600
 ip address negotiate
 ipsec policy policy1
#
apn profile 5gprofile
 apn 5gnet
#
ip route-static 0.0.0.0 0.0.0.0 Cellular 1/0/0
#
return
```

AR2配置文件

```
#
 sysname AR2
#
vlan batch 20
#
dhcp enable
#
interface Vlanif20
 ip address 10.2.1.1 255.255.255.0
 dhcp select interface
 tcp adjust-mss 1200
#
acl number 3101
 rule permit ip source 10.2.1.0 0.0.0.255
#
interface GigabitEthernet0/0/1
 port link-type access
 port default vlan 20
#
ipsec proposal tran1
 esp authentication-algorithm sha2-256
 esp encryption-algorithm aes-128
#
ike proposal 5
 encryption-algorithm aes-128
 dh group14
 authentication-algorithm sha2-256
#
ike peer spua
 pre-shared-key cipher %^%#K{JG:rWVHPMnf;5\|,GW(Luq'qi8BT4nOj%5W5=)%^%#
 remote-address 1.1.1.1
 ike-proposal 5
#
ipsec policy policy1 10 isakmp
 security acl 3101
 ike-peer spua
 proposal tran1
#
interface GigabitEthernet0/0/9
 ip address 2.2.2.2 255.255.255.0
 ipsec policy policy1
```

```
#
ip route-static 0.0.0.0 0.0.0.0 2.2.2.1
#
return
```

7.2.3 配置分支使用 5G 链路和总部建立 L2TP 隧道互联示例

场景介绍

随着企业的发展和业务的增加，在不同地域成立的分支机构和出差的员工，需要和总部建立快速、安全和可靠的网络连接。传统的拨号网络需要租用因特网服务提供商ISP（Internet Service Provider）的电话线路，申请公共的号码或IP地址，不仅产生高额的费用，而且无法为远程用户尤其是出差员工提供便利的接入服务。L2TP技术出现以后，使用L2TP隧道承载PPP报文在Internet上传输成为了解决上述问题的一种途径。无论出差员工是通过传统拨号方式接入Internet，还是通过以太网方式接入Internet，L2TP都可以提供远程接入服务。

根据企业分支和总部之间的业务诉求，可以在5G链路上建立不同的VPN隧道。L2TP是一种二层隧道协议，企业分支配置拨号LAC，与企业总部LNS设备建立L2TP隧道。企业总部可以对分支设备接入帐号密码做安全认证，也可以通过L2TP over IPSec保证数据传输安全。

组网需求

企业总部在其他城市设有分支机构，分支机构部署为以太网络，并配备网关设备通过5G链路接入到Internet。

企业总部的网关部署为LNS，为分支用户提供接入服务，LNS只对L2TP Client进行身份认证，此时可以通过在L2TP Client配置主动拨号的方式，在L2TP Client和LNS之间建立L2TP连接。

图 7-6 配置分支使用 5G 链路和总部建立 L2TP 隧道互联

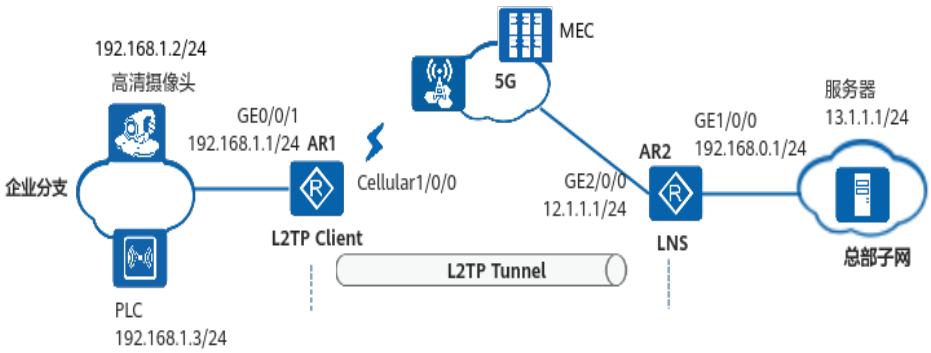

数据准备

表 7-6 数据准备表

项目	数据	说明
运营商分配给企业分支的APN名称	5gnet	APN名称需提前从运营商处获取。

项目	数据	说明
运营商分配给分支的5G Cellular接口的IP地址	1.1.1.1/32	5G Cellular接口拨号接入运营商后，运营商给5G Cellular接口自动分配的IP地址。
运营商对接总部GE2/0/0接口的IP地址	12.1.1.1/24	运营商对接总部AR2 GE2/0/0接口的IP地址用于配置路由信息，使总部和Internet之间的路由互通。

TCP MSS 参数配置说明

为了减少网络传输中不必要的分片和重组，网络规划时需要合理设置终端发出的报文大小。对于TCP报文，可以配置5G AR设备的TCP MSS值，通过修改应用层报文数据包的长度来避免报文分片。在5G 2B专线场景中，TCP MSS取值比较简单，在隧道两端AR设备的LAN侧接入物理口或VLANIF口上配置TCP MSS为推荐值1200。

配置思路

1. 配置5G Cellular接口的连接参数，实现5G Cellular接口接入5G网络。
2. 配置企业子网，为内部用户自动分配IP地址。
3. 配置L2TP功能，PPP用户通过L2TP隧道向总部发出接入请求，总部认证成功后建立隧道。
4. 配置访问公网的路由，路由出接口为5G接口，并使能L2TP Client的主动拨号功能。
5. 在LNS上配置L2TP功能及PPP用户，并配置访问公网的路由。

说明

在5G Cellular接口下执行命令**dialer enable-circular**配置轮询拨号功能时，设备会同时下发自动拨号、IP地址协商和5G Modem自愈的相关配置，无需再重复配置。

操作步骤

1. 配置L2TP Client
   a. 配置5G Cellular接口的连接参数，实现5G Cellular接口接入5G网络。
      i. 创建APN模板。
```
<Huawei> system-view
[Huawei] sysname AR1
[AR1] apn profile 5gprofile
[AR1-apn-profile-5gprofile] apn 5gnet
[AR1-apn-profile-5gprofile] quit
```
      ii. 使能轮询DCC功能，配置自动拨号连接。
```
[AR1] interface Cellular 1/0/0
[AR1-Cellular1/0/0] dialer enable-circular
```
      iii. 在5G Cellular接口上绑定APN模板。
```
[AR1-Cellular1/0/0] apn-profile 5gprofile
Info: The configuration will become effective after link reset.
[AR1-Cellular1/0/0] shutdown
[AR1-Cellular1/0/0] undo shutdown
[AR1-Cellular1/0/0] quit
```
   b. 配置用户侧IP地址。

```
[AR1] interface gigabitethernet 0/0/1
[AR1-GigabitEthernet0/0/1] ip address 192.168.1.1 255.255.255.0
[AR1-GigabitEthernet0/0/1] tcp adjust-mss 1200
[AR1-GigabitEthernet0/0/1] quit
```

c. 设置一个L2TP组并配置相关属性。

```
[AR1] l2tp enable
[AR1] l2tp-group 1
[AR1-l2tp1] tunnel name L2TPClient
[AR1-l2tp1] start l2tp ip 12.1.1.1 fullusername huawei
[AR1-l2tp1] tunnel password cipher 123
[AR1-l2tp1] quit
```

d. 配置虚拟PPP用户的用户名和密码，PPP认证方式以及IP地址。

```
[AR1] interface virtual-template 1
[AR1-Virtual-Template1] ppp chap user huawei
[AR1-Virtual-Template1] ppp chap password cipher YsHsjx_202206
[AR1-Virtual-Template1] ip address 13.1.1.2 255.255.255.0
[AR1-Virtual-Template1] quit
```

e. 配置公网路由，访问公司总部的报文将通过5G接口转发。

```
[AR1] ip route-static 12.1.1.1 255.255.255.255 Cellular1/0/0
```

f. 触发L2TP Client建立L2TP隧道。

```
[AR1] interface virtual-template 1
[AR1-virtual-template1] l2tp-auto-client enable
[AR1-virtual-template1] quit
```

g. 配置私网路由，使企业分支用户与总部子网互通。

```
[AR1] ip route-static 192.168.0.0 255.255.255.0 Virtual-Template1
```

2. 配置LNS

a. 配置IP地址。

```
<Huawei> system-view
[Huawei] sysname AR2
[AR2] interface GigabitEthernet 1/0/0
[AR2-GigabitEthernet1/0/0] ip address 192.168.0.1 255.255.255.0
[AR2-GigabitEthernet1/0/0] tcp adjust-mss 1200
[AR2-GigabitEthernet1/0/0] quit
[AR2] interface gigabitethernet 0/0/2
[AR2-GigabitEthernet0/0/2] ip address 12.1.1.1 255.255.255.0
[AR2-GigabitEthernet0/0/2] quit
```

b. 创建虚拟模板Virtual-Template并配置相关信息。

```
[AR2] interface virtual-template 1
[AR2-Virtual-Template1] ppp authentication-mode chap
[AR2-Virtual-Template1] ip address 13.1.1.1 255.255.255.0
[AR2-Virtual-Template1] quit
```

c. 使能L2TP服务，并设置一个L2TP组。

```
[AR2] l2tp enable
[AR2] l2tp-group 1
```

d. 配置LNS侧本端名称及接收的通道对端名称。

```
[AR2-l2tp1] tunnel name LNS
[AR2-l2tp1] allow l2tp virtual-template 1 remote L2TPClient
```

e. 设置通道验证密码。

```
[AR2-l2tp1] tunnel password cipher 123
[AR2-l2tp1] quit
```

f. 设置用户名及口令分别为**huawei**和**YsHsjx_202206**（应与L2TP Client侧的设置一致）。

```
[AR2] aaa
[AR2-aaa] local-user huawei password
Please configure the login password (8-128)
It is recommended that the password consist of at least 2 types of characters, i
ncluding lowercase letters, uppercase letters, numerals and special characters.
Please enter password:
Please confirm password:
Info: Add a new user.
Warning: The new user supports all access modes. The management user access mode
```

```
s such as Telnet, SSH, FTP, HTTP, and Terminal have security risks. You are advi
sed to configure the required access modes only.
[AR2-aaa] local-user huawei service-type ppp
[AR2-aaa] quit
```

g. 配置公网路由，假设访问公网的路由下一跳地址为12.1.1.2。

```
[AR2] ip route-static 0.0.0.0 0 12.1.1.2
```

配置私网路由，使得企业总部与企业分支用户私网互通。

```
[AR2] ip route-static 192.168.1.0 255.255.255.0 13.1.1.2
```

3. 验证配置结果

配置成功后，分别在L2TP Client和LNS上执行**display l2tp tunnel**命令可发现隧道建立成功，以L2TP Client侧的显示为例：

```
[AR1] display l2tp tunnel

 Total tunnel : 1
 LocalTID RemoteTID RemoteAddress    Port   Sessions RemoteName
 1        1         12.1.1.1         1701   1        LNS
```

执行**display l2tp session**命令可看到会话连接建立情况，以LNS侧的显示为例：

```
[AR2] display l2tp session

Total session : 1
 LocalSID  RemoteSID  LocalTID  Interface           LclTAddr        RmtTAddr        LclSAddr
RmtSAddr
 1         1          1         Virtual-Template1:1   12.1.1.1        1.1.1.1         13.1.1.1
13.1.1.2
```

分支机构的PC可以访问公司总部服务器。

配置脚本

AR1配置文件

```
#
 sysname AR1
#
 l2tp enable
#
apn profile 5gnet
 apn 5gnet
#
interface Virtual-Template1
 ppp chap user huawei
 ppp chap password cipher %^%#'&=6Q(|7-#|.]EB`mK$(h7[CY`2m}-YT)Q=Oh2~2%^%#
 ip address 13.1.1.2 255.255.255.0
 l2tp-auto-client enable
#
interface GigabitEthernet0/0/1
 ip address 192.168.1.1 255.255.255.0
 tcp adjust-mss 1200
#
interface Cellular0/0/1
 dialer enable-circular
 apn-profile 5gnet
 dialer timer autodial 10
 modem auto-recovery dial action modem-reboot fail-times 128
 modem auto-recovery icmp-unreachable action modem-reboot
 modem auto-recovery services-unavailable action modem-reboot test-times 0 interval 3600
 ip address negotiate
#
l2tp-group 1
 tunnel password cipher %@%@d'o6Xpp(i/i:WRC)`'0#3nJ*%@%@
 tunnel name L2TPClient
 start l2tp ip 12.1.1.1 fullusername huawei
#
```

```
ip route-static 12.1.1.1 255.255.255.255 Cellular1/0/0
ip route-static 192.168.0.0 255.255.255.0 Virtual-Template1
#
return
```

AR2配置文件

```
#
 sysname AR2
#
 l2tp enable
#
aaa
 local-user huawei password cipher %^%#_<`.CO&(:LeS/$#F\H0Qv8B]KAZja3}3q'RNx;VI%^%#
 local-user huawei privilege level 0
 local-user huawei service-type ppp
#
interface Virtual-Template1
 ppp authentication-mode chap
 ip address 13.1.1.1 255.255.255.0
#
interface GigabitEthernet1/0/0
 ip address 192.168.0.1 255.255.255.0
 tcp adjust-mss 1200
#
interface GigabitEthernet2/0/0
 ip address 12.1.1.1 255.255.255.0
#
l2tp-group 1
 allow l2tp virtual-template 1 remote L2TPClient
 tunnel password cipher %@%@5j*=S&AGXK'J}kG])REK]_-o%@%@
 tunnel name LNS
#
ip route-static 0.0.0.0 0.0.0.0 12.1.1.2
ip route-static 192.168.1.0 255.255.255.0 13.1.1.2
#
return
```

7.2.4 配置分支使用 5G 链路和总部建立 DSVPN over IPSec 互连示例

场景介绍

分布在不同地域的企业分支可以通过5G链路拨号接入到Internet，再与企业总部建立DSVPN，实现分支站点接口动态获取IP地址，支持NAT穿越以及企业分支之间、企业分支与总部之间快速、安全、高效互连功能。用户可以通过部署DSVPN over IPSec对总部和分支以及分支间传输的数据进行加密保护。

组网需求

如图7-7所示，企业分支使用Router1接入Internet，在Router1上配置DSVPN over IPSec实现企业分支与总部的业务互通。

图 7-7 配置分支与总部之间建立 IPSec over DSVPN 隧道组网图

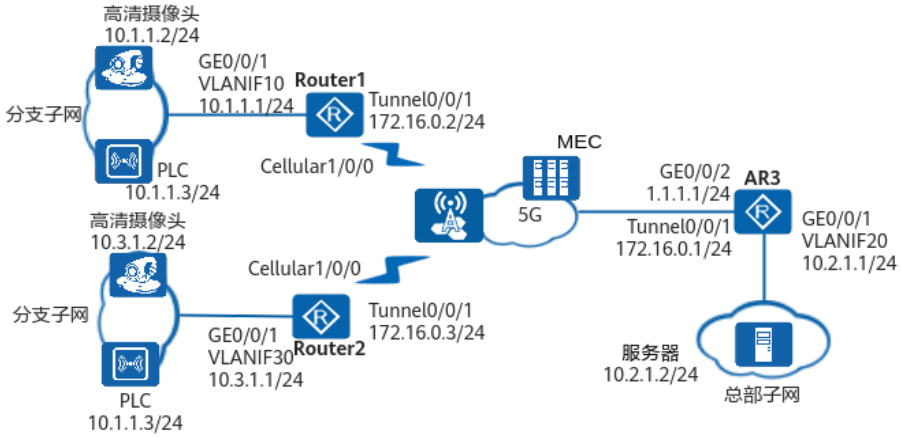

数据准备

表 7-7 数据准备表

项目	数据	说明
运营商分配给企业分支1的APN名称	5gnet1	APN名称需提前从运营商处获取。
运营商分配给企业分支1的5G Cellular接口的IP地址	2.2.2.2/32	5G Cellular接口拨号接入运营商后，运营商给5G Cellular接口自动分配的IP地址。
分支Router1 LAN侧接口信息	VLAN：10 VLANIF10：10.1.1.1	VLAN 10为分支子网用户所在的VLAN，且分支子网用户的网关为VLANIF10接口。
运营商分配给企业分支2的APN名称	5gnet2	APN名称需提前从运营商处获取。
运营商分配给企业分支2的5G Cellular接口的IP地址	3.3.3.3/32	5G Cellular接口拨号接入运营商后，运营商给5G Cellular接口自动分配的IP地址。
分支Router2 LAN侧接口信息	VLAN：30 VLANIF30：10.3.1.1	VLAN 30为分支子网用户所在的VLAN，且分支子网用户的网关为VLANIF30接口。
运营商分配给总部的GE0/0/2接口的IP地址	1.1.1.1/24	总部AR3通过有线的方式接入Internet，该有线接口GE0/0/2采用静态方式配置IP地址。
总部AR3 LAN侧接口信息	VLAN：20 VLANIF20：10.2.1.1	VLAN 20为总部子网用户所在的VLAN，且总部子网用户的网关为VLANIF20接口。

项目	数据	说明
总部AR3对端运营商接口的IP地址	2.2.2.1/24	总部AR3对端运营商接口的IP地址用于配置路由信息，使分支和总部之间的路由互通。

TCP MSS 参数配置说明

为了减少网络传输中不必要的分片和重组，网络规划时需要合理设置终端发出的报文大小。对于TCP报文，可以配置5G AR设备的TCP MSS值，通过修改应用层报文数据包的长度来避免报文分片。在5G 2B专线场景中，TCP MSS取值比较简单，在隧道两端AR设备的LAN侧接入物理口或VLANIF口上配置TCP MSS为推荐值1200。

配置思路

1. 配置5G Cellular接口的连接参数，实现5G Cellular接口接入5G网络。
2. 配置企业子网，为内部用户自动分配IP地址。
3. 配置IKE对等体。
4. 创建IPSec安全提议。
5. 配置IPSec安全框架。
6. 配置Tunnel接口。
7. 部署路由协议来实现分支/总部间的通信。

操作步骤

1. 配置5G Cellular接口的连接参数，实现5G Cellular接口接入5G网络。

   # 配置分支1的连接参数

   a. 创建APN模板。
   ```
   <Huawei> system-view
   [Huawei] sysname Router1
   [Router1] apn profile 5gprofile1
   [Router1-apn-profile-5gprofile1] apn 5gnet1
   [Router1-apn-profile-5gprofile1] quit
   ```
   b. 使能轮询DCC功能，配置自动拨号连接。
   ```
   [Router1] interface Cellular 1/0/0
   [Router1-Cellular1/0/0] dialer enable-circular
   ```
   c. 在5G Cellular接口上绑定APN模板。
   ```
   [Router1-Cellular1/0/0] apn-profile 5gprofile1
   Info: The configuration will become effective after link reset.
   [Router1-Cellular1/0/0] shutdown
   [Router1-Cellular1/0/0] undo shutdown
   [Router1-Cellular1/0/0] quit
   ```

   # 配置分支2的连接参数

   a. 创建APN模板。
   ```
   <Huawei> system-view
   [Huawei] sysname Router2
   [Router2] apn profile 5gprofile2
   [Router2-apn-profile-5gprofile2] apn 5gnet2
   [Router2-apn-profile-5gprofile2] quit
   ```
   b. 使能轮询DCC功能，配置自动拨号连接。
   ```
   [Router2] interface Cellular 1/0/0
   [Router2-Cellular1/0/0] dialer enable-circular
   ```

c. 在5G Cellular接口上绑定APN模板。

```
[Router2-Cellular1/0/0] apn-profile 5gprofile2
Info: The configuration will become effective after link reset.
[Router2-Cellular1/0/0] shutdown
[Router2-Cellular1/0/0] undo shutdown
[Router2-Cellular1/0/0] quit
```

2. 配置企业子网，为内部用户自动分配IP地址。

a. 配置分支1子网，创建VLAN10，将GE0/0/1接口加入VLAN10，并配置DHCP功能。配置VLANIF 10接口TCP最大报文段长度为1200字节并配置DHCP功能。

```
[Router1] vlan 10
[Router1-vlan10] quit
[Router1] interface GigabitEthernet 0/0/1
[Router1-GigabitEthernet0/0/1] port link-type access
[Router1-GigabitEthernet0/0/1] port default vlan 10
[Router1-GigabitEthernet0/0/1] quit
[Router1] dhcp enable
[Router1] interface Vlanif 10
[Router1-Vlanif10] ip address 10.1.1.1 24
[Router1-Vlanif10] dhcp select interface
[Router1-Vlanif10] tcp adjust-mss 1200
[Router1-Vlanif10] quit
```

b. 配置分支2子网，创建VLAN30，将GE0/0/1接口加入VLAN30，并配置DHCP功能。配置VLANIF 30接口TCP最大报文段长度为1200字节并配置DHCP功能。

```
[Router2] vlan 30
[Router2-vlan30] quit
[Router2] interface GigabitEthernet 0/0/1
[Router2-GigabitEthernet0/0/1] port link-type access
[Router2-GigabitEthernet0/0/1] port default vlan 30
[Router2-GigabitEthernet0/0/1] quit
[Router2] dhcp enable
[Router2] interface Vlanif 30
[Router2-Vlanif30] ip address 10.3.1.1 24
[Router2-Vlanif30] dhcp select interface
[Router2-Vlanif20] tcp adjust-mss 1200
[Router2-Vlanif30] quit
```

c. 配置总部子网，创建VLAN20，将GE0/0/1接口加入VLAN20，并配置DHCP功能。配置VLANIF 20接口TCP最大报文段长度为1200字节并配置DHCP功能。

```
<Huawei> system-view
[Huawei] sysname AR3
[AR3] vlan 20
[AR3-vlan20] quit
[AR3] interface GigabitEthernet 0/0/1
[AR3-GigabitEthernet0/0/1] port link-type access
[AR3-GigabitEthernet0/0/1] port default vlan 20
[AR3-GigabitEthernet0/0/1] quit
[AR3] dhcp enable
[AR3] interface Vlanif 20
[AR3-Vlanif20] ip address 10.2.1.1 24
[AR3-Vlanif20] dhcp select interface
[AR3-Vlanif20] tcp adjust-mss 1200
[AR3-Vlanif20] quit
```

3. 配置总部接口IP地址。

```
[AR3] interface gigabitethernet 0/0/2
[AR3-GigabitEthernet0/0/2] ip address 1.1.1.1 255.255.255.0
[AR3-GigabitEthernet0/0/2] quit
```

4. 配置IKE对等体。

a. 配置分支1的IKE安全提议。

```
[Router1] ike proposal 5
[Router1-ike-proposal-5] authentication-algorithm sha2-256
[Router1-ike-proposal-5] encryption-algorithm aes-128
```

```
[Router1-ike-proposal-5] dh group14
[Router1-ike-proposal-5] quit
```

b. 配置分支1的IKE对等体。

```
[Router1] ike peer spu1
[Router1-ike-peer-spu1] ike-proposal 5
[Router1-ike-peer-spu1] pre-shared-key cipher YsHsjx_202206
[Router1-ike-peer-spu1] quit
```

c. 配置分支2的IKE安全提议。

```
[Router2] ike proposal 5
[Router2-ike-proposal-5] authentication-algorithm sha2-256
[Router2-ike-proposal-5] encryption-algorithm aes-128
[Router2-ike-proposal-5] dh group14
[Router2-ike-proposal-5] quit
```

d. 配置分支2的IKE对等体。

```
[Router2] ike peer spu2
[Router2-ike-peer-spu2] ike-proposal 5
[Router2-ike-peer-spu2] pre-shared-key cipher YsHsjx_202206
[Router2-ike-peer-spu2] quit
```

e. 配置总部的IKE安全提议。

```
[AR3] ike proposal 5
[AR3-ike-proposal-5] authentication-algorithm sha2-256
[AR3-ike-proposal-5] encryption-algorithm aes-128
[AR3-ike-proposal-5] dh group14
[AR3-ike-proposal-5] quit
```

f. 配置总部的IKE对等体。

```
[AR3] ike peer spu3
[AR3-ike-peer-spu3] ike-proposal 5
[AR3-ike-peer-spu3] pre-shared-key cipher YsHsjx_202206
[AR3-ike-peer-spu3] quit
```

5. 配置IPSec安全提议。

a. 配置分支1的安全提议。

```
[Router1] ipsec proposal pro1
[Router1-ipsec-proposal-pro1] transform ah-esp
[Router1-ipsec-proposal-pro1] ah authentication-algorithm sha2-256
[Router1-ipsec-proposal-pro1] esp authentication-algorithm sha2-256
[Router1-ipsec-proposal-pro1] esp encryption-algorithm aes-192
[Router1-ipsec-proposal-pro1] quit
```

b. 配置分支2的安全提议。

```
[Router2] ipsec proposal pro1
[Router2-ipsec-proposal-pro1] transform ah-esp
[Router2-ipsec-proposal-pro1] ah authentication-algorithm sha2-256
[Router2-ipsec-proposal-pro1] esp authentication-algorithm sha2-256
[Router2-ipsec-proposal-pro1] esp encryption-algorithm aes-192
[Router2-ipsec-proposal-pro1] quit
```

c. 配置总部安全提议。

```
[AR3] ipsec proposal pro1
[AR3-ipsec-proposal-pro1] transform ah-esp
[AR3-ipsec-proposal-pro1] ah authentication-algorithm sha2-256
[AR3-ipsec-proposal-pro1] esp authentication-algorithm sha2-256
[AR3-ipsec-proposal-pro1] esp encryption-algorithm aes-192
[AR3-ipsec-proposal-pro1] quit
```

6. 配置IPSec安全框架。

a. 配置分支1安全框架。

```
[Router1] ipsec profile profile1
[Router1-ipsec-profile-profile1] proposal pro1
[Router1-ipsec-profile-profile1] ike-peer spu1
[Router1-ipsec-profile-profile1] quit
```

b. 配置分支2安全框架。

```
[Router2] ipsec profile profile1
[Router2-ipsec-profile-profile1] proposal pro1
```

```
[Router2-ipsec-profile-profile1] ike-peer spu2
[Router2-ipsec-profile-profile1] quit
```

c. 配置总部安全框架。

```
[AR3] ipsec profile profile1
[AR3-ipsec-profile-profile1] proposal pro1
[AR3-ipsec-profile-profile1] ike-peer spu3
[AR3-ipsec-profile-profile1] quit
```

7. 配置Tunnel接口。

a. 配置分支1的Tunnel接口和OSPF相关属性以及总部的静态NHRP peer表项，应用安全框架。

```
[Router1] interface tunnel 0/0/1
[Router1-Tunnel0/0/1] ip address 172.16.0.2 255.255.255.0
[Router1-Tunnel0/0/1] tunnel-protocol gre p2mp
[Router1-Tunnel0/0/1] source Cellular 1/0/0
[Router1-Tunnel0/0/1] nhrp entry 172.16.0.1 1.1.1.1 register
[Router1-Tunnel0/0/1] nhrp registration no-unique
[Router1-Tunnel0/0/1] ospf network-type p2mp
[Router1-Tunnel0/0/1] nhrp shortcut
[Router1-Tunnel0/0/1] ipsec profile profile1
[Router1-Tunnel0/0/1] quit
```

b. 配置分支2的Tunnel接口和OSPF相关属性以及总部的静态NHRP peer表项，应用安全框架。

```
[Router2] interface tunnel 0/0/1
[Router2-Tunnel0/0/1] ip address 172.16.0.3 255.255.255.0
[Router2-Tunnel0/0/1] tunnel-protocol gre p2mp
[Router2-Tunnel0/0/1] source Cellular 1/0/0
[Router2-Tunnel0/0/1] nhrp entry 172.16.0.1 1.1.1.1 register
[Router2-Tunnel0/0/1] nhrp registration no-unique
[Router2-Tunnel0/0/1] ospf network-type p2mp
[Router2-Tunnel0/0/1] nhrp shortcut
[Router2-Tunnel0/0/1] ipsec profile profile1
[Router2-Tunnel0/0/1] quit
```

c. 配置总部的Tunnel接口和OSPF相关属性，应用安全框架。

```
[AR3] interface tunnel 0/0/1
[AR3-Tunnel0/0/1] ip address 172.16.0.1 255.255.255.0
[AR3-Tunnel0/0/1] tunnel-protocol gre p2mp
[AR3-Tunnel0/0/1] source GigabitEthernet 0/0/2
[AR3-Tunnel0/0/1] nhrp entry multicast dynamic
[AR3-Tunnel0/0/1] ospf network-type p2mp
[AR3-Tunnel0/0/1] nhrp redirect
[AR3-Tunnel0/0/1] ipsec profile profile1
[AR3-Tunnel0/0/1] quit
```

8. 配置公网路由，使企业分支和总部子网的用户可以互通。

在分支1配置静态路由。

```
[Router1] ip route-static 1.1.1.0 255.255.255.0 Cellular1/0/0
```

在分支2配置静态路由。

```
[Router2] ip route-static 1.1.1.0 255.255.255.0 Cellular1/0/0
```

在总部配置静态路由。

```
[AR3] ip route-static 0.0.0.0 0.0.0.0 1.1.1.2
```

9. 配置OSPF基本功能。

配置分支1。

```
[Router1] ospf 1 router-id 172.16.0.2
[Router1-ospf-1] area 0.0.0.0
[Router1-ospf-1-area-0.0.0.0] network 172.16.0.0 0.0.0.255
[Router1-ospf-1-area-0.0.0.0] network 10.1.1.0 0.0.0.255
[Router1-ospf-1-area-0.0.0.0] quit
[Router1-ospf-1] quit
```

配置分支2。

```
[Router2] ospf 1 router-id 172.16.0.3
[Router2-ospf-1] area 0.0.0.0
[Router2-ospf-1-area-0.0.0.0] network 172.16.0.0 0.0.0.255
[Router2-ospf-1-area-0.0.0.0] network 10.3.1.0 0.0.0.255
[Router2-ospf-1-area-0.0.0.0] quit
[Router2-ospf-1] quit
```

配置总部。

```
[AR3] ospf 1 router-id 172.16.0.1
[AR3-ospf-1] area 0.0.0.0
[AR3-ospf-1-area-0.0.0.0] network 172.16.0.0 0.0.0.255
[AR3-ospf-1-area-0.0.0.0] network 10.2.1.0 0.0.0.255
[AR3-ospf-1-area-0.0.0.0] quit
[AR3-ospf-1] quit
```

验证

1. 在分支1和分支2上执行**display nhrp peer all**命令，可以看到总部的注册信息。以分支1的显示为例：

```
[Router1] display nhrp peer all
--------------------------------------------------------------------------------
Protocol-addr   Mask  NBMA-addr       NextHop-addr    Type        Flag
--------------------------------------------------------------------------------
172.16.0.1      32    1.1.1.1         172.16.0.1      AR          up
--------------------------------------------------------------------------------
Tunnel interface: Tunnel0/0/1
Created time    : 00:10:58
Expire time     : --

Number of nhrp peers: 1
```

2. 检查IPSec SA信息，在总部和分支上查看进行注册后生成的IPSec SA信息。以分支1的显示为例：

```
[Router1] display ipsec sa

ipsec sa information:

===============================

Interface: Tunnel0/0/1
===============================


  ----------------------------
  IPSec profile name: "1"
  Mode              : PROF-ISAKMP
  ----------------------------
    Connection ID     : 16092
    Encapsulation mode: Tunnel
    Holding time      : 0d 0h 17m 3s
    Tunnel local      : 2.2.2.2/500
    Tunnel remote     : 1.1.1.1/500
    Flow source       : 2.2.2.2/255.255.255.255
0/0-65535
    Flow destination  : 1.1.1.1/255.255.255.255
0/0-65535

    [Outbound ESP SAs]
      SPI: 3064365 (0x2ec22d)
      Proposal: ESP-ENCRYPT-AES-256 ESP-AUTH-
SHA2-256-128
      SA remaining soft duration (kilobytes/sec):
1345536/2588
      SA remaining hard duration (kilobytes/sec):
1843200/3560
      Outpacket count       : 0
      Outpacket encap count : 0
      Outpacket drop count  : 0
```

```
      Max sent sequence-number: 0
      UDP encapsulation used for NAT traversal:
N

    [Outbound AH SAs]
      SPI: 710278 (0xad686)
      Proposal: AH-SHA1-96
      SA remaining soft duration (kilobytes/sec):
1345536/2517
      SA remaining hard duration (kilobytes/sec):
1843200/3560
      Outpacket count       : 0
      Outpacket encap count : 0
      Outpacket drop count  : 0
      Max sent sequence-number: 0
      UDP encapsulation used for NAT traversal:
N

    [Inbound AH SAs]
      SPI: 11203890 (0xaaf532)
      Proposal: AH-SHA1-96
      SA remaining soft duration (kilobytes/sec):
1290240/2408
      SA remaining hard duration (kilobytes/sec):
1843200/3560
      Inpacket count        : 0
      Inpacket decap count  : 0
      Inpacket drop count   : 0
      Max received sequence-number:
0
      UDP encapsulation used for NAT traversal:
N
      Anti-replay : Enable
      Anti-replay window size: 1024

    [Inbound ESP SAs]
      SPI: 6901571 (0x694f43)
      Proposal: ESP-ENCRYPT-AES-256 ESP-AUTH-
SHA2-256-128
      SA remaining soft duration (kilobytes/sec):
1290240/2480
      SA remaining hard duration (kilobytes/sec):
1843200/3560
      Inpacket count        : 0
      Inpacket decap count  : 0
      Inpacket drop count   : 0
      Max received sequence-number:
0
      UDP encapsulation used for NAT traversal:
N
      Anti-replay : Enable
      Anti-replay window size: 1024
```

配置文件

Router1配置文件

```
#
 sysname Router1
#
apn profile 5gprofile1
 apn 5gnet1
#
ipsec proposal pro1
 transform ah-esp
 ah authentication-algorithm sha2-256
 esp authentication-algorithm sha2-256
 esp encryption-algorithm aes-128
#
ike proposal 5
```

```
 encryption-algorithm aes-128
 authentication-algorithm sha2-256
 dh group14
#
ike peer spu1
 pre-shared-key cipher %^%#JvZxR2g8c;a9~FPN~n'$7`DEV&=G(=Et02P/%\*!%^%#
 ike-proposal 5
#
ipsec profile profile1
 ike-peer spu1
 proposal pro1
#
interface Vlanif10
 ip address 10.1.1.1 255.255.255.0
 dhcp select interface
 tcp adjust-mss 1200
#
interface GigabitEthernet0/0/1
 port link-type access
 port default vlan 10
#
interface Cellular1/0/0
 dialer enable-circular
 apn-profile 5gprofile1
 dialer timer autodial 10
 modem auto-recovery dial action modem-reboot fail-times 128
 modem auto-recovery icmp-unreachable action modem-reboot
 modem auto-recovery services-unavailable action modem-reboot test-times 0 interval 3600
 ip address negotiate
#
interface Tunnel0/0/1
 ip address 172.16.0.2 255.255.255.0
 tunnel-protocol gre p2mp
 source Cellular1/0/0
 ospf network-type p2mp
 nhrp shortcut
 nhrp entry 172.16.0.1 1.1.1.1 register
 nhrp registration no-unique
 ipsec profile profile1
#
ospf 1 router-id 172.16.0.2
 area 0.0.0.0
 network 172.16.0.0 0.0.0.255
 network 10.1.1.0 0.0.0.255
#
ip route-static 1.1.1.1 255.255.255.0 Cellular1/0/0
#
return
```

Router2配置文件

```
#
 sysname Router2
#
apn profile 5gprofile2
 apn 5gnet2
#
ipsec proposal pro1
 transform ah-esp
 ah authentication-algorithm sha2-256
 esp authentication-algorithm sha2-256
 esp encryption-algorithm aes-128
#
ike proposal 5
 encryption-algorithm aes-128
 authentication-algorithm sha2-256
 dh group14
#
ike peer spu2
 pre-shared-key cipher %^%#JvZxR2g8c;a9~FPN~n'$7`DEV&=G(=Et02P/%\*!%^%#
 ike-proposal 5
```

```
#
ipsec profile profile1
 ike-peer spu2
 proposal pro1
#
interface Vlanif30
 ip address 10.3.1.1 255.255.255.0
 dhcp select interface
 tcp adjust-mss 1200
#
interface GigabitEthernet0/0/1
 port link-type access
 port default vlan 30
#
interface Cellular1/0/0
 dialer enable-circular
 apn-profile 5gprofile2
 dialer timer autodial 10
 modem auto-recovery dial action modem-reboot fail-times 128
 modem auto-recovery icmp-unreachable action modem-reboot
 modem auto-recovery services-unavailable action modem-reboot test-times 0 interval 3600
 ip address negotiate
#
interface Tunnel0/0/1
 ip address 172.16.0.3 255.255.255.0
 tunnel-protocol gre p2mp
 source Cellular1/0/0
 ospf network-type p2mp
 nhrp shortcut
 nhrp entry 172.16.0.1 1.1.1.1 register
 nhrp registration no-unique
 ipsec profile profile1
#
ospf 1 router-id 172.16.0.3
 area 0.0.0.0
 network 172.16.0.0 0.0.0.255
 network 10.3.1.0 0.0.0.255
#
ip route-static 1.1.1.1 255.255.255.0 Cellular1/0/0
#
return
```

AR3配置文件

```
#
 sysname AR3
#
ipsec proposal pro1
 ah authentication-algorithm sha2-256
 esp authentication-algorithm sha2-256
 esp encryption-algorithm aes-128
#
ike proposal 5
 encryption-algorithm aes-128
 authentication-algorithm sha2-256
 dh group14
#
ike peer spu3
 pre-shared-key cipher %^%#K{JG:rWVHPMnf;5\|,GW(Luq'qi8BT4nOj%5W5=)%^%#
 ike-proposal 5
#
ipsec profile profile1
 ike-peer spu3
 proposal pro1
#
interface GigabitEthernet0/0/2
 ip address 1.1.1.1 255.255.255.0
#
interface Tunnel0/0/1
 ip address 172.16.0.1 255.255.255.0
 tunnel-protocol gre p2mp
```

```
 source GigabitEthernet0/0/2
 ospf network-type p2mp
 nhrp redirect
 nhrp entry multicast dynamic
 ipsec profile profile1
#
interface Vlanif20
 ip address 10.2.1.1 255.255.255.0
 dhcp select interface
 tcp adjust-mss 1200
#
interface GigabitEthernet0/0/1
 port link-type access
 port default vlan 20
#
ospf 1 router-id 172.16.0.1
 area 0.0.0.0
 network 172.16.0.0 0.0.0.255
 network 10.2.1.0 0.0.0.255
#
ip route-static 0.0.0.0 0.0.0.0 1.1.1.2
#
return
```

7.2.5 配置分支使用 5G 链路和总部建立 VPDN 互联示例

场景介绍

VPDN是基于拨号网络发展出来的一种虚拟私有拨号网络。VPDN在企业分支和总部网关之间，建立一条透明的点到点虚拟链路来转发流量，是应用于远程办公场景中为出差员工远程访问企业内网资源提供接入服务的一种重要VPN技术。二层隧道协议L2TP是VPDN隧道协议的一种，L2TP通过拨号网络（PSTN/ISDN），基于点到点协议PPP，在L2TP访问集中器LAC和L2TP网络服务器LNS之间建立隧道，实现分支与总部互联。

组网需求

如图1所示，企业分支通过AR1企业路由器与总部建立VPDN连接，AR1企业路由器通过5G链路拨号与运营商提供的LAC建立PPP连接，运营商的LAC与企业总部LNS设备建立L2TP隧道转发业务流量，实现企业分支用户和总部之间的L2TP连接。

图 7-8 配置分支使用 5G 链路和总部建立 VPDN 互联组网图

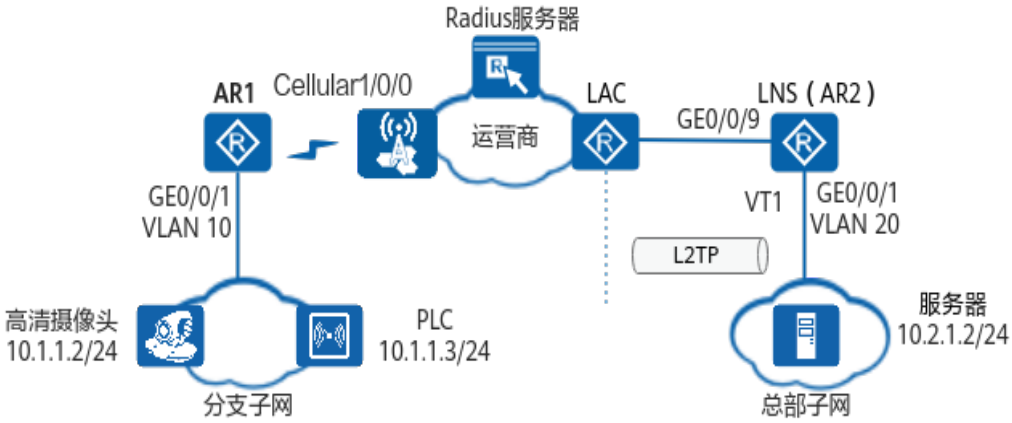

数据准备

表 7-8 数据准备表

项目	数据	说明
运营商分配给企业分支的APN名称	5gnet	APN名称需提前从运营商处获取。
运营商分配给企业分支接入认证的用户名	huawei	用户名、密码以及认证方式需要咨询运营商。
运营商分配给企业分支接入认证的密码	YsHsjx_202206	用户名、密码以及认证方式需要咨询运营商。
运营商分配给企业分支接入认证时的认证方式	chap	用户名、密码以及认证方式需要咨询运营商。
LNS分配给分支5G Cellular接口的IP地址	1.1.1.2/32	5G Cellular接口拨号接入运营商后，运营商给5G Cellular接口自动分配的IP地址。
运营商给总部GE0/0/9接口分配的IP地址	2.2.2.2/24	总部AR2通过有线的方式接入Internet，该有线接口GE0/0/9采用静态方式配置IP地址。
分支AR1 LAN侧接口信息	所属VLAN：VLAN：10 网关地址：VLANIF10（10.1.1.1/24） LAN侧物理接口：GE0/0/1	VLAN 10为分支子网用户所在的VLAN，且分支子网用户的网关为VLANIF10接口。
总部AR2 LAN侧接口信息	所属VLAN：20 网关地址：VLANIF20（10.2.1.1/24） LAN侧物理接口：GE0/0/1	VLAN 20为总部子网用户所在的VLAN，且总部子网用户的网关为VLANIF20接口。
总部AR2的虚拟接口IP地址	VT1接口：1.1.1.1/24	为对端LAC分配IP地址，接入L2TP连接。

TCP MSS 参数配置说明

为了减少网络传输中不必要的分片和重组，网络规划时需要合理设置终端发出的报文大小。对于TCP报文，可以配置5G AR设备的TCP MSS值，通过修改应用层报文数据包的长度来避免报文分片。在5G 2B专线场景中，TCP MSS取值比较简单，在隧道两端AR设备的LAN侧接入物理口或VLANIF口上配置TCP MSS为推荐值1200。

配置思路

1. 配置5G Cellular接口的连接参数，实现5G Cellular接口接入5G网络。
2. 配置企业子网，为内部用户自动分配IP地址。
3. 配置总部LNS功能，对分支用户进行L2TP接入认证。
4. 配置静态路由，使企业分支和总部的内网流量可以上行传输到Internet。

说明

在5G Cellular接口下执行命令**dialer enable-circular**配置轮询拨号功能时，设备会同时下发自动拨号、IP地址协商和5G Modem自愈的相关配置，无需再重复配置。

操作步骤

1. 配置5G Cellular接口的连接参数，实现5G Cellular接口接入5G网络。
   a. 创建APN模板。
   ```
   <Huawei> system-view
   [Huawei] sysname AR1
   [AR1] apn profile 5gprofile
   [AR1-apn-profile-5gprofile] apn 5gnet
   [AR1-apn-profile-5gprofile] user name huawei password cipher YsHsjx_202206
   authentication-mode chap
   [AR1-apn-profile-5gprofile] quit
   ```
   b. 使能轮询DCC功能，配置自动拨号连接。
   ```
   [AR1] interface Cellular 1/0/0
   [AR1-Cellular1/0/0] dialer enable-circular
   ```
   c. 在5G Cellular接口上绑定APN模板。
   ```
   [AR1-Cellular1/0/0] apn-profile 5gprofile
   Info: The configuration will become effective after link reset.
   [AR1-Cellular1/0/0] shutdown
   [AR1-Cellular1/0/0] undo shutdown
   [AR1-Cellular1/0/0] quit
   ```
2. 配置企业子网，为内部用户自动分配IP地址。
   a. 配置分支子网，创建VLAN10，将GE0/0/1接口加入VLAN10。配置VLANIF 10接口TCP最大报文段长度为1200字节并配置DHCP功能。
   ```
   [AR1] vlan 10
   [AR1-vlan10] quit
   [AR1] interface GigabitEthernet 0/0/1
   [AR1-GigabitEthernet0/0/1] port link-type access
   [AR1-GigabitEthernet0/0/1] port default vlan 10
   [AR1-GigabitEthernet0/0/1] quit
   [AR1] dhcp enable
   [AR1] interface Vlanif 10
   [AR1-Vlanif10] ip address 10.1.1.1 24
   [AR1-Vlanif10] dhcp select interface
   [AR1-Vlanif10] tcp adjust-mss 1200
   [AR1-Vlanif10] quit
   ```
   b. 配置总部子网，创建VLAN20，将GE0/0/1接口加入VLAN20。配置VLANIF 20接口TCP最大报文段长度为1200字节并配置DHCP功能。
   ```
   <Huawei> system-view
   [Huawei] sysname AR2
   [AR2] vlan 20
   [AR2-vlan20] quit
   [AR2] interface GigabitEthernet 0/0/1
   [AR2-GigabitEthernet0/0/1] port link-type access
   [AR2-GigabitEthernet0/0/1] port default vlan 20
   [AR2-GigabitEthernet0/0/1] quit
   [AR2] dhcp enable
   [AR2] interface Vlanif 20
   [AR2-Vlanif20] ip address 10.2.1.1 24
   ```

```
[AR2-Vlanif20] dhcp select interface
[AR2-Vlanif20] tcp adjust-mss 1200
[AR2-Vlanif20] quit
```

3. 配置总部LNS功能

   a. # 在与通道相连接的物理接口上配置IP地址。

```
<AR2> system-view
[AR2] interface gigabitEthernet 0/0/9
[AR2-GigabitEthernet0/0/9] ip address 2.2.2.2 255.255.255.0
[AR2-GigabitEthernet0/0/9] quit
```

   b. # 配置地址池。

```
[AR2] ip pool 1
[AR2-ip-pool-1] network 1.1.1.0 mask 24
[AR2-ip-pool-1] gateway-list 1.1.1.1
[AR2-ip-pool-1] quit
```

   c. # 创建虚模板Virtual-Template并配置相关信息。

```
[AR2] interface virtual-template 1
[AR2-Virtual-Template1] ppp authentication-mode chap
[AR2-Virtual-Template1] ip address 1.1.1.1 255.255.255.0
[AR2-Virtual-Template1] remote address pool 1
[AR2-Virtual-Template1] quit
```

   d. # 使能L2TP服务，并设置一个L2TP组。

```
[AR2] l2tp enable
[AR2] l2tp-group 1
```

   e. # 配置LNS侧本端名称及接收的通道对端名称。

```
[AR2-l2tp1] tunnel name LNS
[AR2-l2tp1] allow l2tp virtual-template 1 remote LAC
```

   f. # 启用通道验证并设置通道验证密码。

```
[AR2-l2tp1] tunnel authentication
[AR2-l2tp1] tunnel password cipher YsHsjx_202206
[AR2-l2tp1] quit
```

   g. # 设置用户名及口令分别为**huawei**和**YsHsjx_202206**（应与LAC侧的设置一致）。

```
[AR2] aaa
[AR2-aaa] local-user huawei password
Please configure the login password (8-128)It is recommended that the password consist of at
least 2 types of characters, including lowercase letters, uppercase letters, numerals and special
characters.
Please enter password:
Please confirm password:
Info: Add a new user.
Warning: The new user supports all access modes. The management user access modes such as
Telnet, SSH, FTP, HTTP, and Terminal have security risks. You are advised to configure the
required access modes only.
[AR2-aaa] local-user huawei service-type ppp
[AR2-aaa] quit
```

4. 配置静态路由，使企业分支和总部子网的用户可以互通。

   a. 配置分支缺省路由，出接口为5G Cellular1/0/0。

```
[AR1] ip route-static 0.0.0.0 0 Cellular 1/0/0
[AR1] quit
```

   b. 配置两条总部静态路由，一条缺省路由的下一跳地址为对端运营商接口的IP地址，一条静态路由的下一跳地址为1.1.1.2。

```
[AR2] ip route-static 0.0.0.0 0 2.2.2.1
[AR2] ip route-static 10.1.1.0 255.255.255.0 1.1.1.2
[AR2] quit
```

验证

1. 在AR1上执行命令**display ip interface brief Cellular 1/0/0**，查看Cellular1/0/0接口获取到的IP地址。

```
<AR1> display ip interface brief Cellular 1/0/0
*down: administratively down
^down: standby
(l): loopback
(s): spoofing
(E): E-Trunk down
Interface                    IP Address/Mask      Physical   Protocol

Cellular1/0/0                 1.1.1.2/32          up         up
```

2. 在AR1上执行命令**display Cellular 1/0/0 all**，查看Cellular1/0/0接口的状态信息。

```
<AR1> display Cellular 1/0/0 all
Modem State:
Hardware Information.
=====================
Model = RG801
Modem Type = 5G module
Modem Firmware Version = RG801HEAAAR01A07M8G
Hardware Version = HiB5000_MODEM Ver.A
Integrate circuit card identity (ICCID) = 98681020100202000069
International Mobile Subscriber Identity (IMSI) = 460070075591996
Mobile Station International ISDN Number (MSISDN) = None
International Mobile Equipment Identity (IMEI) = 867147050004457
Factory Serial Number (FSN) = 0123456789ABCDEF
Modem Status = Online
Profile Information.
====================
Profile 1
--------
PDP Type = IPv4, Header Compression = OFF
Data Compression = OFF
Access Point Name (APN) = 5gnet
Packet Session Status = Active
* - Default profile
Network Information.
====================
Current Service Status = Service available
Service Domain = Combined
Current Service = PS
Packet Service = Attached
Packet Session Status = Active
Current Roaming Status = Roaming
Network Selection Mode = Automatic
Network Connection Mode = LTE-NR
Current Network Connection = 5G(NSA)
Mobile Country Code (MCC) = 369
Mobile Network Code (MNC) = 77
Mobile Operator Information = Unknown
Tracking Area Code (TAC) = 1002
Cell ID = 9881858
Radio Information.
==================
Current Bands :
  WCDMA: AUTO
  LTE: B3
  NR: AUTO
LTE:
Current Band = B3
Current RSSI >= -51 dBm
Current RSRP = -71 dBm (strong)
Current RSRQ = -6 dB
Current SINR = 6 dB
NR:
Current Band = N78
Current RSRP = -65 dBm (strong)
Current RSRQ = -10 dB
Current SINR = 38 dB
Bands supported :
  WCDMA: WCDMA850 WCDMA900 WCDMA2100
```

```
  FDD LTE: B1 B3 B5 B7 B8 B20 B28
  TDD LTE: B34 B38 B39 B40 B41
  FDD NR: N1 N3 N28
  TDD NR: N41 N77 N78 N79
Modem Security Information.
==========================
SIM ID = 1
PIN Verification = Disabled
PIN Status = Ready
Number of Retries remaining = 3
SIM Status = OK
```

3. 在AR1上执行命令**ping -a 10.1.1.1 10.2.1.1**，模拟分支用户访问总部用户的流量，流量能Ping通。

```
<AR1> ping -a 10.1.1.1 10.2.1.1
  PING 10.2.1.1: 56  data bytes, press CTRL_C to break
    Reply from 10.2.1.1: bytes=56 Sequence=1 ttl=255 time=51 ms
    Reply from 10.2.1.1: bytes=56 Sequence=2 ttl=255 time=35 ms
    Reply from 10.2.1.1: bytes=56 Sequence=3 ttl=255 time=45 ms
    Reply from 10.2.1.1: bytes=56 Sequence=4 ttl=255 time=40 ms
    Reply from 10.2.1.1: bytes=56 Sequence=5 ttl=255 time=37 ms

  --- 10.2.1.1 ping statistics ---
    5 packet(s) transmitted
    5 packet(s) received
    0.00% packet loss
    round-trip min/avg/max = 35/41/51 ms
```

配置脚本

AR1配置文件

```
#
 sysname AR1
#
vlan batch 10
#
dhcp enable
#
interface Vlanif10
 ip address 10.1.1.1 255.255.255.0
 tcp adjust-mss 1200
#
interface GigabitEthernet0/0/1
 port link-type access
 port default vlan 10
#
interface Cellular1/0/0
 dialer enable-circular
 apn-profile 5gprofile
 dialer timer autodial 10
 modem auto-recovery dial action modem-reboot fail-times 128
 modem auto-recovery icmp-unreachable action modem-reboot
 modem auto-recovery services-unavailable action modem-reboot test-times 0 interval 3600
 ip address negotiate
#
apn profile 5gprofile
 apn 5gnet
 user name huawei password cipher YsHsjx_202206 authentication-mode chap
#
ip route-static 0.0.0.0 0.0.0.0 Cellular1/0/0
#
return
```

AR2配置文件

```
#
 sysname AR2
#
vlan batch 20
```

```
#
 l2tp enable
#
interface Vlanif20
 ip address 10.1.1.1 255.255.255.0
 tcp adjust-mss 1200
#
interface GigabitEthernet0/0/1
 port link-type access
 port default vlan 20
#
ip pool 1
 gateway-list 1.1.1.0
 network 1.1.1.1 mask 255.255.255.0
#
aaa
 local-user huawei password cipher %^%#_<`.CO&(:LeS/$#F\H0Qv8B]KAZja3}3q'RNx;VI%^%#
 local-user huawei privilege level 0
 local-user huawei service-type ppp
#
interface Virtual-Template1
 ppp authentication-mode chap
 remote address pool 1
 ip address 1.1.1.1 255.255.255.0
#
interface GigabitEthernet0/0/9
 ip address 2.2.2.2 255.255.255.0
#
l2tp-group 1
 allow l2tp virtual-template 1 remote LAC
 tunnel password cipher %@%@5j*=S&AGXK'J}kG])REK]_-o%@%@
 tunnel name LNS
#
ip route-static 0.0.0.0 0.0.0.0 2.2.2.1
ip route-static 10.1.1.0 255.255.255.0 1.1.1.2
#
return
```

7.2.6 配置分支使用 5G 链路和总部建立 Ethernet over GRE 隧道互联示例

场景介绍

Ethernet over GRE是一种将以太网协议报文通过GRE封装后，在另一个网络中传输的隧道技术，属于一种L2VPN。为了转发Ethernet报文，配置Ethernet over GRE功能时，需在设备LAN侧的物理以太网接口和WAN侧的Tunnel接口上分别绑定二层VE接口，让LAN侧物理以太网接口收到的以太报文通过设备两侧绑定的VE接口进行转发，然后从WAN侧Tunnel接口进行GRE封装后发送出去，最终实现以太报文通过GRE隧道进行透传。

企业分支通过5G链路接入到Internet，然后与企业总部建立VPN，使得分支可以通过Internet接入总部。根据企业分支和总部之间的业务诉求，可以在5G链路上建立不同的VPN隧道。当企业总部和分支的网络都是以太网络，且总部和分支之间需要交互二层业务时，可以在分支的5G链路上构建一条Ethernet over GRE隧道来承载它们之间的L2业务流量，达到在5G链路上传递Ethernet报文的目的。

组网需求

如图1所示，企业分支和总部之间通过Internet网络互通。企业分支使用AR1企业路由器作为出口网关，AR1企业路由器通过5G链路接入Internet。企业分支和总部之间在5G链路上构建Ethernet over GRE隧道，转发它们之间的二层以太报文。

图 7-9 配置分支使用 5G 链路和总部建立 Ethernet over GRE 隧道互联组网图

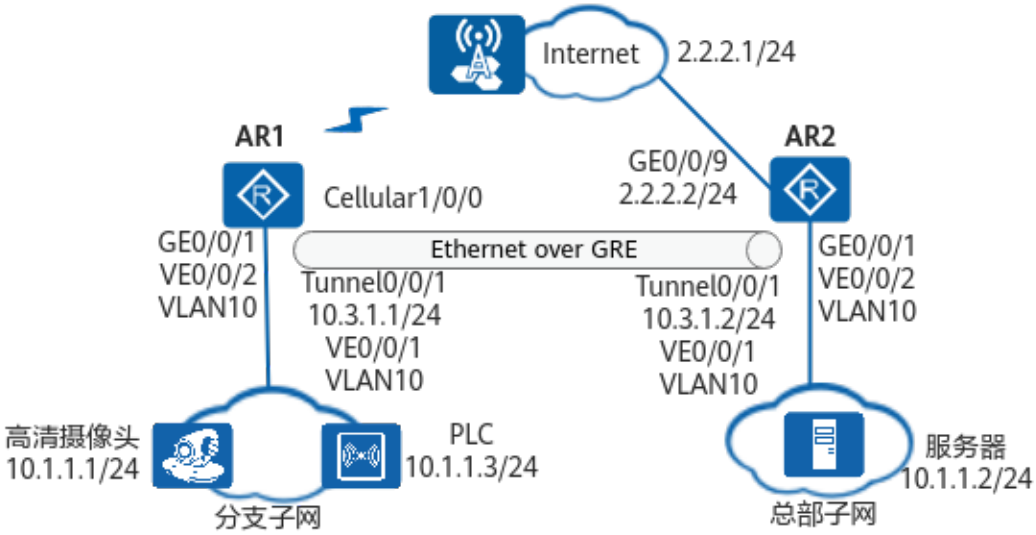

数据准备

表 7-9 数据准备表

项目	数据	说明
运营商给分支分配的APN名称	5gnet	APN名称需提前从运营商处获取。
运营商给分支5G Cellular接口分配的IP地址	1.1.1.1/32	5G Cellular接口拨号接入运营商后，运营商给5G Cellular接口自动分配的IP地址。 **说明** 使用GRE隧道时，要求运营商给5G Cellular接口分配的IP地址为固定IP地址。本例中，假设运营商为5G Cellular接口分配的固定IP地址为1.1.1.1。
运营商给总部GE0/0/9接口分配的IP地址	2.2.2.2/24	总部AR2通过有线的方式接入Internet，该有线接口GE0/0/9采用静态方式获取IP地址。
运营商对接总部GE0/0/9接口的IP地址	2.2.2.1/24	运营商对接总部AR2 GE0/0/9接口的IP地址用于配置路由信息，使总部和Internet之间的路由互通。
分支AR1 LAN侧接口信息	LAN侧物理接口：GE0/0/1 绑定的VE接口：VE0/0/2 所属VLAN：10	分支和总部用户都在同一个网段，所属的VLAN都为VLAN 10。

项目	数据	说明
总部AR2 LAN侧接口信息	LAN侧物理接口：GE0/0/1 绑定的VE接口：VE0/0/2 所属VLAN：10	
分支AR1 Tunnel接口信息	IP地址：10.3.1.1/24 绑定的VE接口：VE0/0/1 所属VLAN：10	分支GRE隧道的地址。
总部AR2 Tunnel接口信息	IP地址：10.3.1.2/24 绑定的VE接口：VE0/0/1 所属VLAN：10	总部GRE隧道的地址。

MTU 及 TCP MSS 参数配置说明

为了减少网络传输中不必要的分片和重组，网络规划时需要合理设置终端发出的报文大小，设置依据如下：

- 对于UDP报文，可以调节发送端的MTU值，如果发送端不支持调节MTU值，则需要在5G AR设备上调节MTU值，以确保报文在网络中传输时不会产生二次分片。
- 对于TCP报文，可以配置5G AR设备的TCP MSS值，通过修改应用层报文数据包的长度来避免报文分片。

在5G 2B专线场景中，TCP MSS取值比较简单，在隧道两端AR设备的LAN侧接入物理口或VLANIF口上配置TCP MSS为推荐值1200。MTU取值相对复杂，与如下三个参数有关，具体的配置方法请参见**表2** 。

- 单层GRE隧道组网，报文经过5G AR设备后会增加28字节，即单层GRE头长度为28字节。
- 双层GRE隧道组网，报文经过5G AR设备后会增加56字节，即双层GRE头长度为56字节。
- 5G网络中GTP封装会增加至少40字节，其中IP头20字节，UDP头8字节，GTP消息封装12字节。考虑到GTP支持扩展消息头，建议多预留1至2个扩展消息头长度（4或8字节）作为缓冲，即GTP封装头长度最大为48字节。

表 7-10 MTU 参数配置方法

组网场景	在发送端调节MTU方值	或者在5G AR上调节MTU值
单层GRE隧道组网	发送端MTU值=网络中设备允许通过MTU值减去单层GRE头长度28，再减去GTP封装头长度48，即发送端MTU值=MTU-28-48。	5G接口MTU值=网络中设备允许通过MTU值减去GTP封装头长度，即5G接口MTU值=MTU-48。本例中，MTU取值为1500。
双层GRE隧道组网	发送端MTU值=网络中设备允许通过MTU值减去双层GRE头长度56，再减去GTP封装头长度48，即发送端MTU值=MTU-56-48。	最外层L3 GRE隧道接口MTU值=网络中设备允许通过MTU值减去单层GRE头长度28，再减去GTP封装头长度48，即最外层L3 GRE隧道接口MTU值=MTU-28-48。

配置思路

1. 配置5G Cellular接口的连接参数，实现5G Cellular接口接入5G网络。
2. 配置Ethernet over GRE，创建VE接口。
3. 配置Tunnel接口，建立GRE隧道，使分支AR1及总部AR2之间可以通过GRE隧道直连。
4. 将二层VE接口绑定到WAN侧Tunnel接口和LAN侧物理接口，使企业分支和总部之间的以太报文可以通过GRE隧道传输。
5. 配置静态路由，使企业分支和总部子网的用户可以互通。

说明

在5G Cellular接口下执行命令**dialer enable-circular**配置轮询拨号功能时，设备会同时下发自动拨号、IP地址协商和5G Modem自愈的相关配置，无需再重复配置。

操作步骤

1. 配置5G Cellular接口的连接参数，实现5G Cellular接口接入5G网络。
   a. 创建APN模板。
   ```
   <Huawei> system-view
   [Huawei] sysname AR1
   [AR1] apn profile 5gprofile
   [AR1-apn-profile-5gprofile] apn 5gnet
   [AR1-apn-profile-5gprofile] quit
   ```
   b. 使能轮询DCC功能，配置自动拨号连接。
   ```
   [AR1] interface Cellular 1/0/0
   [AR1-Cellular1/0/0] dialer enable-circular
   [AR1-Cellular1/0/0] mtu 1452
   ```
   c. 在5G Cellular接口上绑定APN模板。
   ```
   [AR1-Cellular1/0/0] apn-profile 5gprofile
   Info: The configuration will become effective after link reset.
   [AR1-Cellular1/0/0] shutdown
   [AR1-Cellular1/0/0] undo shutdown
   [AR1-Cellular1/0/0] quit
   ```
2. 配置Ethernet over GRE，创建VE接口。
   a. 创建分支的二层VE接口VE0/0/1和VE0/0/2。
   ```
   [AR1] vlan 10
   [AR1-vlan10] quit
   ```

```
[AR1] interface Virtual-Ethernet 0/0/1
[AR1-Virtual-Ethernet0/0/1] portswitch
Vlan Info: The operation may take a few seconds. Please wait for a moment...done
[AR1-Virtual-Ethernet0/0/1] port link-type access
[AR1-Virtual-Ethernet0/0/1] port default vlan 10
[AR1-Virtual-Ethernet0/0/1] quit
[AR1] interface Virtual-Ethernet 0/0/2
[AR1-Virtual-Ethernet0/0/2] portswitch
Vlan Info: The operation may take a few seconds. Please wait for a moment...done
[AR1-Virtual-Ethernet0/0/2] port link-type access
[AR1-Virtual-Ethernet0/0/2] port default vlan 10
[AR1-Virtual-Ethernet0/0/2] quit
```

b. 创建总部的二层VE接口VE0/0/1和VE0/0/2。

```
<Huawei> system-view
[Huawei] sysname AR2
[AR2] vlan 10
[AR2-vlan10] quit
[AR2] interface Virtual-Ethernet 0/0/1
[AR2-Virtual-Ethernet0/0/1] portswitch
Vlan Info: The operation may take a few seconds. Please wait for a moment...done
[AR2-Virtual-Ethernet0/0/1] port link-type access
[AR2-Virtual-Ethernet0/0/1] port default vlan 10
[AR2-Virtual-Ethernet0/0/1] quit
[AR2] interface Virtual-Ethernet 0/0/2
[AR2-Virtual-Ethernet0/0/2] portswitch
Vlan Info: The operation may take a few seconds. Please wait for a moment...done
[AR2-Virtual-Ethernet0/0/2] port link-type access
[AR2-Virtual-Ethernet0/0/2] port default vlan 10
[AR2-Virtual-Ethernet0/0/2] quit
```

3. 配置Tunnel接口，创建GRE隧道。

a. 配置总部WAN侧接口GE0/0/9的IP地址。

```
[AR2] interface GigabitEthernet 0/0/9
[AR2-GigabitEthernet0/0/9] ip address 2.2.2.2 24
[AR2-GigabitEthernet0/0/9] quit
```

b. 配置总部的Tunnel接口。

```
[AR2] interface Tunnel0/0/1
[AR2-Tunnel0/0/1] tunnel-protocol gre
Warning: After this tunnel encapsulation protocol was configured, the MTU and other
parameter settings of the tunnel were deleted.
[AR2-Tunnel0/0/1] ip address 10.3.1.2 255.255.255.0
[AR2-Tunnel0/0/1] source GigabitEthernet 0/0/9
[AR2-Tunnel0/0/1] destination 1.1.1.1
[AR2-Tunnel0/0/1] quit
```

c. 配置分支的Tunnel接口。

```
[AR1] interface Tunnel0/0/1
[AR1-Tunnel0/0/1] tunnel-protocol gre
Warning: After this tunnel encapsulation protocol was configured, the MTU and other
parameter settings of the tunnel were deleted.
[AR1-Tunnel0/0/1] ip address 10.3.1.1 255.255.255.0
[AR1-Tunnel0/0/1] source Cellular 1/0/0
[AR1-Tunnel0/0/1] destination 2.2.2.2
[AR1-Tunnel0/0/1] quit
```

4. 将二层VE接口绑定到WAN侧Tunnel接口和LAN侧物理接口。

a. 配置分支的VE0/0/1绑定到Tunnel0/0/1接口，VE0/0/2绑定到GE0/0/1接口。

```
[AR1] interface Tunnel0/0/1
[AR1-Tunnel0/0/1] map interface Virtual-Ethernet 0/0/1
[AR1-Tunnel0/0/1] quit
[AR1] interface GigabitEthernet 0/0/1
[AR1-GigabitEthernet0/0/1] undo portswitch  //GE0/0/1如果不是三层物理以太网接口，则需要执
行undo portswitch命令切换
[AR1-GigabitEthernet0/0/1] map interface Virtual-Ethernet 0/0/2
Warnning: The interface is being bound to Virtual-Ethernet.Other services are unavailable on
the interface.
[AR1-GigabitEthernet0/0/1] tcp adjust-mss 1200
[AR1-GigabitEthernet0/0/1] quit
```

b. 配置总部的VE0/0/1绑定到Tunnel0/0/1接口，VE0/0/2绑定到GE0/0/1接口。

```
[AR2] interface Tunnel0/0/1
[AR2-Tunnel0/0/1] map interface Virtual-Ethernet 0/0/1
[AR2-Tunnel0/0/1] quit
[AR2] interface GigabitEthernet 0/0/1
[AR2-GigabitEthernet0/0/1] undo portswitch
[AR2-GigabitEthernet0/0/1] map interface Virtual-Ethernet 0/0/2
Warnning: The interface is being bound to Virtual-Ethernet.Other services are unavailable on
the interface.
[AR2-GigabitEthernet0/0/1] tcp adjust-mss 1200
[AR2-GigabitEthernet0/0/1] quit
```

5. 配置静态路由，使企业分支和总部的内部主机HostA和HostB可以互通。

a. 配置分支的缺省路由，指定出接口为5G Cellular接口。

```
[AR1] ip route-static 0.0.0.0 0 Cellular 1/0/0
[AR1] quit
```

b. 配置总部的明细路由，指定下一跳地址为对端运营商接口的IP地址。

```
[AR2] ip route-static 1.1.1.1 255.255.255.255 2.2.2.1
[AR2] quit
```

验证

1. 在AR1上执行命令**display ip interface brief Cellular 1/0/0**，查看Cellular1/0/0接口获取到的IP地址。

```
<AR1> display ip interface brief Cellular 1/0/0
*down: administratively down
^down: standby
(l): loopback
(s): spoofing
(E): E-Trunk down
Interface                    IP Address/Mask      Physical   Protocol

Cellular1/0/0                1.1.1.1/32           up         up
```

2. 在AR1上执行命令**display Cellular 1/0/0 all**，查看Cellular1/0/0接口的状态信息。

```
<AR1> display Cellular 1/0/0 all
Modem State:
Hardware Information.
=====================
Model = RG801
Modem Type = 5G module
Modem Firmware Version = RG801HEAAAR01A07M8G
Hardware Version = HiB5000_MODEM Ver.A
Integrate circuit card identity (ICCID) = 98681020100202000069
International Mobile Subscriber Identity (IMSI) = 460070075591996
Mobile Station International ISDN Number (MSISDN) = None
International Mobile Equipment Identity (IMEI) = 867147050004457
Factory Serial Number (FSN) = 0123456789ABCDEF
Modem Status = Online
Profile Information.
====================
Profile 1
--------
PDP Type = IPv4, Header Compression = OFF
Data Compression = OFF
Access Point Name (APN) = 5gnet
Packet Session Status = Active
* - Default profile
Network Information.
====================
Current Service Status = Service available
Service Domain = Combined
Current Service = PS
Packet Service = Attached
Packet Session Status = Active
Current Roaming Status = Roaming
```

```
Network Selection Mode = Automatic
Network Connection Mode = LTE-NR
Current Network Connection = 5G(NSA)
Mobile Country Code (MCC) = 369
Mobile Network Code (MNC) = 77
Mobile Operator Information = Unknown
Tracking Area Code (TAC) = 1002
Cell ID = 9881858
Radio Information.
==================
Current Bands :
  WCDMA: AUTO
  LTE: B3
  NR: AUTO
LTE:
Current Band = B3
Current RSSI >= -51 dBm
Current RSRP = -71 dBm (strong)
Current RSRQ = -6 dB
Current SINR = 6 dB
NR:
Current Band = N78
Current RSRP = -65 dBm (strong)
Current RSRQ = -10 dB
Current SINR = 38 dB
Bands supported :
  WCDMA: WCDMA850 WCDMA900 WCDMA2100
  FDD LTE: B1 B3 B5 B7 B8 B20 B28
  TDD LTE: B34 B38 B39 B40 B41
  FDD NR: N1 N3 N28
  TDD NR: N41 N77 N78 N79
Modem Security Information.
===========================
SIM ID = 1
PIN Verification = Disabled
PIN Status = Ready
Number of Retries remaining = 3
SIM Status = OK
```

3. 在AR1上执行命令**ping -a 10.1.1.1 10.1.1.2**，模拟分支用户访问总部用户的流量，流量能Ping通。

```
<AR1> ping -a 10.1.1.1 10.1.1.2
  PING 10.2.1.1: 56  data bytes, press CTRL_C to break
    Reply from 10.1.1.2: bytes=56 Sequence=1 ttl=255 time=51 ms
    Reply from 10.1.1.2: bytes=56 Sequence=2 ttl=255 time=35 ms
    Reply from 10.1.1.2: bytes=56 Sequence=3 ttl=255 time=45 ms
    Reply from 10.1.1.2: bytes=56 Sequence=4 ttl=255 time=40 ms
    Reply from 10.1.1.2: bytes=56 Sequence=5 ttl=255 time=37 ms

  --- 10.1.1.2 ping statistics ---
    5 packet(s) transmitted
    5 packet(s) received
    0.00% packet loss
    round-trip min/avg/max = 35/41/51 ms
```

配置文件

AR1配置文件

```
#
 sysname AR1
#
vlan batch 10
#
interface GigabitEthernet0/0/1
 undo portswitch
 map interface Virtual-Ethernet0/0/2
 tcp adjust-mss 1200
#
interface Cellular1/0/0
```

```
 dialer enable-circular
 apn-profile 5gprofile
 dialer timer autodial 10
 modem auto-recovery dial action modem-reboot fail-times 128
 modem auto-recovery icmp-unreachable action modem-reboot
 modem auto-recovery services-unavailable action modem-reboot test-times 0 interval 3600
 ip address negotiate
 mtu 1452
#
interface Virtual-Ethernet0/0/1
 portswitch
 port link-type access
 port default vlan 10
#
interface Virtual-Ethernet0/0/2
 portswitch
 port link-type access
 port default vlan 10
#
interface Tunnel0/0/1
 ip address 10.3.1.1 255.255.255.0
 tunnel-protocol gre
 source Cellular1/0/0
 destination 2.2.2.2
 map interface Virtual-Ethernet0/0/1
#
apn profile 5gprofile
 apn 5gnet
#
ip route-static 0.0.0.0 0.0.0.0 Cellular 1/0/0
#
return
```

AR2配置文件

```
#
 sysname AR2
#
vlan batch 10
#
interface GigabitEthernet0/0/1
 undo portswitch
 map interface Virtual-Ethernet0/0/2
 tcp adjust-mss 1200
#
interface GigabitEthernet0/0/9
 ip address 2.2.2.2 255.255.255.0
#
interface Virtual-Ethernet0/0/1
 portswitch
 port link-type access
 port default vlan 10
#
interface Virtual-Ethernet0/0/2
 portswitch
 port link-type access
 port default vlan 10
#
interface Tunnel0/0/1
 ip address 10.3.1.2 255.255.255.0
 tunnel-protocol gre
 source GigabitEthernet0/0/9
 destination 1.1.1.1
 map interface Virtual-Ethernet0/0/1
#
ip route-static 1.1.1.1 255.255.255.255 2.2.2.1
#
return
```

7.2.7 配置双网关多发选收示例（5G CPE 场景）

组网需求

说明

AR设备配置多个GE子接口与5G CPE（N5368X）桥接模式对接时，由于CPE使用场景约束，AR设备需要使用子接口下的MAC地址修改功能保证CPE学习MAC地址的唯一性。

如图7-10所示，AR1和AR3之间的链路作为主链路进行业务传输，AR2和AR4之间的链路作为备链路进行业务传输，AR1和AR3之间、AR2和AR4之间通过Tunnel0/0/1接口和Tunnel0/0/2接口连接通信，在Tunnel0/0/1接口配置多发选收功能，将Tunnel0/0/1接口下的报文复制到Tunnel0/0/2接口发送出去，防止出现业务中断的现象。此外：

- 在接入层、汇聚层运行SEP协议，当环网上没有故障链路时，SEP能够消除以太网冗余环路。当环网上发生链路故障时，SEP能够迅速恢复环网上各节点间通信通路。
- 双设备之间存在报文复制后MAC地址漂移的问题和WAN侧环网的问题，因此配置VRRP备份且使用虚地址建立Tunnel0/0/0接口来传递以太报文。
- 配置AR1和AR3之间的BFD会话，检测WAN侧连通性，联动VRRP保证AR1和AR3的VRRP同步切换。
- 双设备之间使用Eth-Trunk连接，保证连接的可靠性，否则中间链路Down后，在非直连场景会造成VRRP双主，造成二层网络出现环路。

图 7-10 配置多发选收组网图

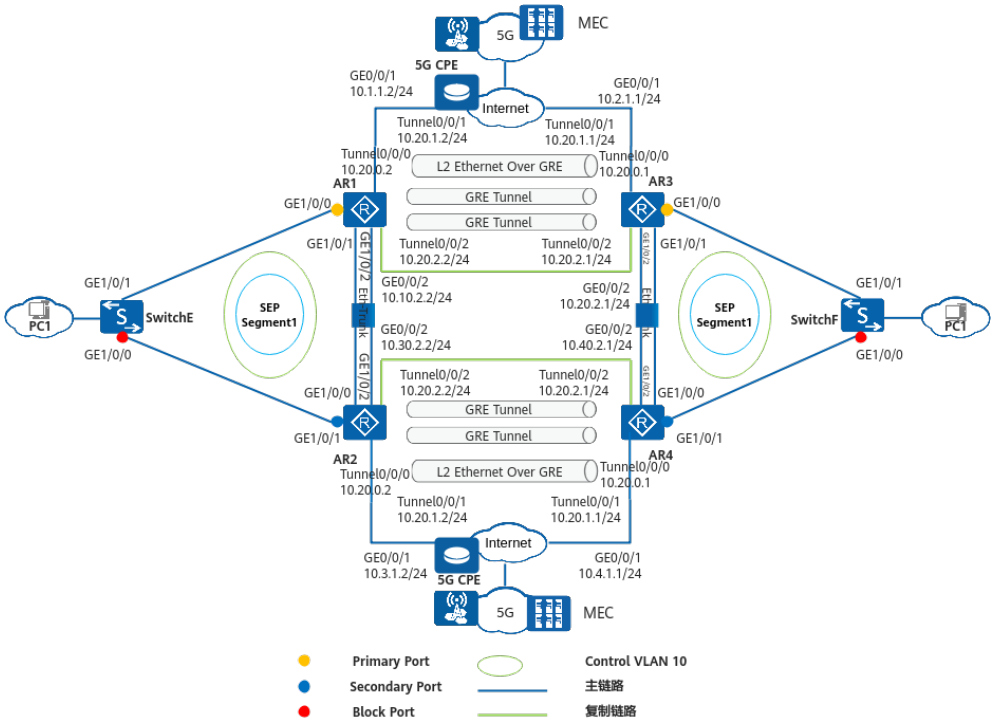

数据准备

表 7-11 数据准备表

项目	数据	说明
运营商给分支分配的APN名称	5gnet	APN名称需提前从运营商处获取。
分支AR1 接口信息	WAN侧物理接口：GE0/0/1，GE0/0/2 IP地址：10.1.1.2/24，10.10.2.2/24 LAN侧物理接口：GE1/0/0 互联接口：GE1/0/1，GE1/0/2	LAN侧物理接口所属VLAN为20和30；互联接口所属VLAN为20和30。30为以太数据转发VLAN，20为VRRP业务VLAN，10为SEP的控制VLAN。
分支AR2 接口信息	WAN侧物理接口：GE0/0/1，GE0/0/2 IP地址：10.3.1.2/24，10.30.2.2/24 LAN侧物理接口：GE1/0/0 互联接口：GE1/0/1，GE1/0/2	LAN侧物理接口所属VLAN为20和30；互联接口所属VLAN为20和30。30为以太数据转发VLAN，20为VRRP业务VLAN，10为SEP的控制VLAN。
分支AR3 接口信息	WAN侧物理接口：GE0/0/1，GE0/0/2 IP地址：10.2.1.1/24，10.20.2.1/24 LAN侧物理接口：GE1/0/0 互联接口：GE1/0/1，GE1/0/2	LAN侧物理接口所属VLAN为20和30；互联接口所属VLAN为20和30。30为以太数据转发VLAN，20为VRRP业务VLAN，10为SEP的控制VLAN。
分支AR4 接口信息	WAN侧物理接口：GE0/0/1，GE0/0/2 IP地址：10.4.1.1/24，10.40.2.1/24 LAN侧物理接口：GE1/0/0 互联接口：GE1/0/1，GE1/0/2	LAN侧物理接口所属VLAN为20和30；互联接口所属VLAN为20和30。30为以太数据转发VLAN，20为VRRP业务VLAN，10为SEP的控制VLAN。

项目	数据	说明
分支AR1 Tunnel接口的IP地址	外层隧道： Tunnel0/0/1：10.20.1.2/24 Tunnel0/0/2：10.20.2.2/24 内层隧道： Tunnel0/0/0：10.20.0.2	分支隧道的信息。
分支AR2 Tunnel接口的IP地址	外层隧道： Tunnel0/0/1：10.20.1.2/24 Tunnel0/0/2：10.20.2.2/24 内层隧道： Tunnel0/0/0：10.20.0.2	分支隧道的信息。
分支AR3 Tunnel接口的IP地址	外层隧道： Tunnel0/0/1：10.20.1.1/24 Tunnel0/0/2：10.20.2.1/24 内层隧道： Tunnel0/0/0：10.20.0.1	分支隧道的信息。
分支AR4 Tunnel接口的IP地址	外层隧道： Tunnel0/0/1：10.20.1.1/24 Tunnel0/0/2：10.20.2.1/24 内层隧道： Tunnel0/0/0：10.20.0.1	分支隧道的信息。

MTU 及 TCP MSS 参数配置说明

为了减少网络传输中不必要的分片和重组，网络规划时需要合理设置终端发出的报文大小，设置依据如下：

- 对于UDP报文，可以调节发送端的MTU值，如果发送端不支持调节MTU值，则需要在5G AR设备上调节MTU值，以确保报文在网络中传输时不会产生二次分片。
- 对于TCP报文，可以配置5G AR设备的TCP MSS值，通过修改应用层报文数据包的长度来避免报文分片。

在5G2B专线场景中，TCP MSS取值比较简单，在隧道两端AR设备的LAN侧接入物理口或VLANIF口上配置TCP MSS为推荐值1200。MTU取值相对复杂，与如下三个参数有关，具体的配置方法请参见**表2** 。

- 单层GRE隧道组网，报文经过5G AR设备后会增加28字节，即单层GRE头长度为28字节。

- 双层GRE隧道组网，报文经过5G AR设备后会增加56字节，即双层GRE头长度为56字节。
- 5G网络中GTP封装会增加至少40字节，其中IP头20字节，UDP头8字节，GTP消息封装12字节。考虑到GTP支持扩展消息头，建议多预留1至2个扩展消息头长度（4或8字节）作为缓冲，即GTP封装头长度最大为48字节。

表 7-12 MTU 参数配置方法

组网场景	在发送端调节MTU方值	或者在5G AR上调节MTU值
单层GRE隧道组网	发送端MTU值=网络中设备允许通过MTU值减去单层GRE头长度28，再减去GTP封装头长度48，即发送端MTU值=MTU-28-48。	5G接口MTU值=网络中设备允许通过MTU值减去GTP封装头长度，即5G接口MTU值=MTU-48。
双层GRE隧道组网	发送端MTU值=网络中设备允许通过MTU值减去双层GRE头长度56，再减去GTP封装头长度48，即发送端MTU值=MTU-56-48。	最外层L3 GRE隧道接口MTU值=网络中设备允许通过MTU值减去单层GRE头长度28，再减去GTP封装头长度48，即最外层L3 GRE隧道接口MTU值=MTU-28-48。本例中，MTU取值为1500。

配置思路

本例配置主要思路是：

1. 在二层网络上配置SEP协议。
2. 配置设备间的网络互连。
3. 配置VRRP主备备份。
4. 配置BFD会话，实现设备间链路故障的快速检测。
5. 配置双设备之间使用Eth-Trunk连接。
6. 配置Tunnel接口并配置多发选收功能，将Tunnel0/0/1接口下的报文复制到Tunnel0/0/2接口。
7. 配置静态路由。

操作步骤

1. 在二层网络上配置SEP协议。

   # 配置AR1。

```
<Huawei> system-view
[Huawei] sysname AR1
[AR1] vlan batch 20 30
[AR1] sep segment 1
[AR1-sep-segment1] control-vlan 10
[AR1-sep-segment1] protected-instance all
[AR1-sep-segment1] quit
[AR1] interface gigabitethernet 1/0/0
[AR1-GigabitEthernet1/0/0] port hybrid tagged vlan 10 20 30
[AR1-GigabitEthernet1/0/0] stp disable
[AR1-GigabitEthernet1/0/0] sep segment 1 edge primary
[AR1-GigabitEthernet1/0/0] quit
```

配置AR2。

```
<Huawei> system-view
[Huawei] sysname AR2
[AR2] vlan batch 20 30
[AR2] sep segment 1
[AR2-sep-segment1] control-vlan 10
[AR2-sep-segment1] protected-instance all
[AR2-sep-segment1] quit
[AR2] interface gigabitethernet 1/0/1
[AR2-GigabitEthernet1/0/1] port hybrid tagged vlan 10 20 30
[AR2-GigabitEthernet1/0/1] stp disable
[AR2-GigabitEthernet1/0/1] sep segment 1 edge secondary
[AR2-GigabitEthernet1/0/1] quit
```

配置SwitchE。

```
<Huawei> system-view
[Huawei] sysname SwitchE
[SwitchE] vlan batch 20 30
[SwitchE] sep segment 1
[SwitchE-sep-segment1] control-vlan 10
[SwitchE-sep-segment1] protected-instance all
[SwitchE-sep-segment1] quit
[SwitchE] interface gigabitethernet 1/0/0
[SwitchE-GigabitEthernet1/0/0] port hybrid tagged vlan 10 20 30
[SwitchE-GigabitEthernet1/0/0] stp disable
[SwitchE-GigabitEthernet1/0/0] sep segment 1 priority 128
[SwitchE-GigabitEthernet1/0/0] quit
[SwitchE] interface gigabitethernet 1/0/1
[SwitchE-GigabitEthernet1/0/1] port hybrid tagged vlan 10 20 30
[SwitchE-GigabitEthernet1/0/1] stp disable
[SwitchE-GigabitEthernet1/0/1] sep segment 1
[SwitchE-GigabitEthernet1/0/1] quit
```

配置AR3、AR4和SwitchF。

AR3与AR1的配置相同，AR4与AR2的配置相同，SwitchF与SwitchE的配置相同。具体配置过程略。请参见本示例的**配置文件**。

2. 配置设备间的网络互连。

配置AR1。

```
[AR1] interface Virtual-Ethernet 0/0/0
[AR1-Virtual-Ethernet0/0/0] portswitch
[AR1-Virtual-Ethernet0/0/0] port link-type access
[AR1-Virtual-Ethernet0/0/0] port default vlan 30
[AR1-Virtual-Ethernet0/0/0] quit
[AR1] interface Virtual-Ethernet 0/0/1
[AR1-Virtual-Ethernet0/0/1] portswitch
[AR1-Virtual-Ethernet0/0/1] port link-type trunk
[AR1-Virtual-Ethernet0/0/1] port trunk allow-pass vlan 30
[AR1-Virtual-Ethernet0/0/1] quit
[AR1] interface gigabitethernet 0/0/1
[AR1-GigabitEthernet0/0/1] ip address 10.1.1.2 255.255.255.0
[AR1-GigabitEthernet0/0/1] quit
[AR1] interface gigabitethernet 0/0/2
[AR1-GigabitEthernet0/0/2] ip address 10.10.2.2 255.255.255.0
[AR1-GigabitEthernet0/0/2] quit
[AR1] interface vlanif 30
[AR1-Vlanif30] tcp adjust-mss 1200
[AR1-Vlanif30] map interface Virtual-Ethernet0/0/0
[AR1-Vlanif30] quit
```

配置AR3。

```
[AR3] interface Virtual-Ethernet 0/0/0
[AR3-Virtual-Ethernet0/0/0] portswitch
[AR3-Virtual-Ethernet0/0/0] port link-type access
[AR3-Virtual-Ethernet0/0/0] port default vlan 30
[AR3-Virtual-Ethernet0/0/0] quit
[AR3] interface Virtual-Ethernet 0/0/1
```

```
[AR3-Virtual-Ethernet0/0/1] portswitch
[AR3-Virtual-Ethernet0/0/1] port link-type trunk
[AR3-Virtual-Ethernet0/0/1] port trunk allow-pass vlan 30
[AR3-Virtual-Ethernet0/0/1] quit
[AR3] interface gigabitethernet 0/0/1
[AR3-GigabitEthernet0/0/1] ip address 10.2.1.1 255.255.255.0
[AR3-GigabitEthernet0/0/1] quit
[AR3] interface gigabitethernet 0/0/2
[AR3-GigabitEthernet0/0/2] ip address 10.20.2.1 255.255.255.0
[AR3-GigabitEthernet0/0/2] quit
[AR3] interface vlanif 30
[AR3-Vlanif30] tcp adjust-mss 1200
[AR3-Vlanif30] map interface Virtual-Ethernet0/0/0
[AR3-Vlanif30] quit
```

配置AR2和AR4。

AR2与AR1的配置相同，AR4与AR3的配置相同。

具体配置过程略。请参见本示例的**配置文件**。

3. 配置VRRP主备备份。

在AR1上创建VRRP备份组1，配置AR1在该备份组中的优先级为120。

```
[AR1] interface vlanif 20
[AR1-Vlanif20] ip address 172.16.1.1 255.255.255.0
[AR1-Vlanif20] vrrp vrid 1 virtual-ip 172.16.1.100
[AR1-Vlanif20] vrrp vrid 1 priority 120
[AR1-Vlanif20] vrrp vrid 1 track bfd-session 3 reduced 15
[AR1-Vlanif20] vrrp vrid 1 track bfd-session 5 reduced 15
[AR1-Vlanif20] quit
[AR1] interface tunnel 0/0/0
[AR1-Tunnel0/0/0] tunnel-protocol gre
[AR1-Tunnel0/0/0] ip address 10.20.0.2 255.255.255.0
[AR1-Tunnel0/0/0] source 172.16.1.100
[AR1-Tunnel0/0/0] destination 172.17.1.100
[AR1-Tunnel0/0/0] map interface Virtual-Ethernet0/0/1
[AR1-Tunnel0/0/0] quit
```

在AR2上创建VRRP备份组1，其在该备份组中的优先级为缺省值100。

```
[AR2] interface vlanif 20
[AR2-Vlanif20] ip address 172.16.1.2 255.255.255.0
[AR2-Vlanif20] vrrp vrid 1 virtual-ip 172.16.1.100
[AR2-Vlanif20] quit
[AR2] interface tunnel 0/0/0
[AR2-Tunnel0/0/0] tunnel-protocol gre
[AR2-Tunnel0/0/0] ip address 10.20.0.2 255.255.255.0
[AR2-Tunnel0/0/0] source 172.16.1.100
[AR2-Tunnel0/0/0] destination 172.17.1.100
[AR2-Tunnel0/0/0] map interface Virtual-Ethernet0/0/1
[AR2-Tunnel0/0/0] quit
```

在AR3上创建VRRP备份组1，配置AR3在该备份组中的优先级为120。

```
[AR3] interface vlanif 20
[AR3-Vlanif20] ip address 172.17.1.1 255.255.255.0
[AR3-Vlanif20] vrrp vrid 1 virtual-ip 172.17.1.100
[AR3-Vlanif20] vrrp vrid 1 priority 120
[AR3-Vlanif20] vrrp vrid 1 track bfd-session 4 reduced 15
[AR3-Vlanif20] vrrp vrid 1 track bfd-session 6 reduced 15
[AR3-Vlanif20] quit
[AR3] interface tunnel 0/0/0
[AR3-Tunnel0/0/0] tunnel-protocol gre
[AR3-Tunnel0/0/0] ip address 10.20.0.1 255.255.255.0
[AR3-Tunnel0/0/0] source 172.17.1.100
[AR3-Tunnel0/0/0] destination 172.16.1.100
[AR3-Tunnel0/0/0] map interface Virtual-Ethernet0/0/1
[AR3-Tunnel0/0/0] quit
```

在AR4上创建VRRP备份组1，其在该备份组中的优先级为缺省值100。

```
[AR4] interface vlanif 20
[AR4-Vlanif20] ip address 172.17.1.2 255.255.255.0
```

```
[AR4-Vlanif20] vrrp vrid 1 virtual-ip 172.17.1.100
[AR4-Vlanif20] quit
[AR4] interface tunnel 0/0/0
[AR4-Tunnel0/0/0] tunnel-protocol gre
[AR4-Tunnel0/0/0] ip address 10.20.0.1 255.255.255.0
[AR4-Tunnel0/0/0] source 172.17.1.100
[AR4-Tunnel0/0/0] destination 172.16.1.100
[AR4-Tunnel0/0/0] map interface Virtual-Ethernet0/0/1
[AR4-Tunnel0/0/0] quit
```

4. 配置BFD会话，实现设备间链路故障的快速检测。

   # 配置AR1。

```
[AR1] bfd
[AR1-bfd] quit
[AR1] bfd tunnel1 bind peer-ip 10.20.1.1 source-ip 10.20.1.2
[AR1-bfd-session-atob] discriminator local 3
[AR1-bfd-session-atob] discriminator remote 4
[AR1-bfd-session-atob] commit
[AR1-bfd-session-atob] quit
[AR1] bfd tunnel2 bind peer-ip 10.20.2.1 source-ip 10.20.2.1
[AR1-bfd-session-atob] discriminator local 5
[AR1-bfd-session-atob] discriminator remote 6
[AR1-bfd-session-atob] commit
[AR1-bfd-session-atob] quit
```

   # 配置AR3。

```
[AR3] bfd
[AR3-bfd] quit
[AR3] bfd tunnel1 bind peer-ip 10.20.1.2 source-ip 10.20.1.1
[AR3-bfd-session-atob] discriminator local 4
[AR3-bfd-session-atob] discriminator remote 3
[AR3-bfd-session-atob] commit
[AR3-bfd-session-atob] quit
[AR3] bfd tunnel2 bind peer-ip 10.20.2.1 source-ip 10.20.2.1
[AR3-bfd-session-atob] discriminator local 6
[AR3-bfd-session-atob] discriminator remote 5
[AR3-bfd-session-atob] commit
[AR3-bfd-session-atob] quit
```

5. 配置双设备之间使用Eth-Trunk连接。

   # 配置AR1。

```
[AR1] interface GigabitEthernet 1/0/1
[AR1-GigabitEthernet1/0/1] Eth-Trunk 1
[AR1-GigabitEthernet1/0/1] quit
[AR1] interface GigabitEthernet 1/0/2
[AR1-GigabitEthernet1/0/2] Eth-Trunk 1
[AR1-GigabitEthernet1/0/2] quit
[AR1] interface Eth-Trunk1
[AR1-Eth-Trunk1] port hybrid tagged vlan 10 20 30
[AR1-Eth-Trunk1] stp disable
[AR1-Eth-Trunk1] sep segment 1
[AR1-Eth-Trunk1] quit
```

   # 配置AR2。

```
[AR2] interface GigabitEthernet 1/0/0
[AR2-GigabitEthernet1/0/1] Eth-Trunk 1
[AR2-GigabitEthernet1/0/1] quit
[AR2] interface GigabitEthernet 1/0/2
[AR2-GigabitEthernet1/0/2] Eth-Trunk 1
[AR2-GigabitEthernet1/0/2] quit
[AR2] interface Eth-Trunk1
[AR2-Eth-Trunk1] port hybrid tagged vlan 10 20 30
[AR2-Eth-Trunk1] stp disable
[AR2-Eth-Trunk1] sep segment 1
[AR2-Eth-Trunk1] quit
```

   # 配置AR3和AR4。

   AR3与AR1的配置相同，AR4与AR2的配置相同。

具体配置过程略。请参见本示例的配置文件。

6. 配置Tunnel接口并配置多发选收功能，将Tunnel0/0/1接口下的报文复制到Tunnel0/0/2接口。

   # 配置AR1。

```
[AR1] interface tunnel 0/0/1
[AR1-Tunnel0/0/1] tunnel-protocol gre
[AR1-Tunnel0/0/1] ip address 10.20.1.2 255.255.255.0
[AR1-Tunnel0/0/1] source 10.1.1.2
[AR1-Tunnel0/0/1] destination 10.2.1.1
[AR1-Tunnel0/0/1] mtu 1424
[AR1-Tunnel0/0/1] quit
[AR1] interface tunnel 0/0/2
[AR1-Tunnel0/0/2] tunnel-protocol gre
[AR1-Tunnel0/0/2] ip address 10.20.2.2 255.255.255.0
[AR1-Tunnel0/0/2] source 10.10.2.2
[AR1-Tunnel0/0/2] destination 10.20.2.1
[AR1-Tunnel0/0/2] quit
[AR1] replication path-group g1
[AR1-replication-path-group-g1] path Tunnel 0/0/2 priority 1
[AR1-replication-path-group-g1] quit
[AR1] interface tunnel 0/0/1
[AR1-Tunnel0/0/1] replication path-group g1
[AR1-Tunnel0/0/1] quit
```

   # 配置AR3。

```
[AR3] interface tunnel 0/0/1
[AR3-Tunnel0/0/1] tunnel-protocol gre
[AR3-Tunnel0/0/1] ip address 10.20.1.1 255.255.255.0
[AR3-Tunnel0/0/1] source 10.2.1.1
[AR3-Tunnel0/0/1] destination 10.1.1.2
[AR3-Tunnel0/0/1] mtu 1424
[AR3-Tunnel0/0/1] quit
[AR3] interface tunnel 0/0/2
[AR3-Tunnel0/0/2] tunnel-protocol gre
[AR3-Tunnel0/0/2] ip address 10.20.2.1 255.255.255.0
[AR3-Tunnel0/0/2] source 10.20.2.1
[AR3-Tunnel0/0/2] destination 10.10.2.2
[AR3-Tunnel0/0/2] quit
[AR3] replication path-group g1
[AR3-replication-path-group-g1] path Tunnel 0/0/2 priority 1
[AR3-replication-path-group-g1] quit
[AR3] interface tunnel 0/0/1
[AR3-Tunnel0/0/1] replication path-group g1
[AR3-Tunnel0/0/1] quit
```

   # 配置AR2和AR4。

   AR2与AR1的配置相同，AR4与AR3的配置相同。

   具体配置过程略。请参见本示例的配置文件。

7. 配置静态路由。

   # 配置AR1。

```
[AR1] ip route-static 172.17.1.0 255.255.255.0 Tunnel 0/0/1
[AR1] ip route-static 172.17.1.0 255.255.255.0 Tunnel 0/0/2 preference 100
[AR1] ip route-static 10.2.1.0 255.255.255.0 10.1.1.1
[AR1] ip route-static 10.20.2.0 255.255.255.0 10.10.2.1
```

   # 配置AR3。

```
[AR3] ip route-static 172.16.1.0 255.255.255.0 Tunnel 0/0/1
[AR3] ip route-static 172.16.1.0 255.255.255.0 Tunnel 0/0/2 preference 100
[AR3] ip route-static 10.1.1.0 255.255.255.0 10.2.1.2
[AR3] ip route-static 10.10.2.0 255.255.255.0 10.20.2.2
```

   # 配置AR2和AR4。

   AR2与AR1的配置相同，AR4与AR3的配置相同。

具体配置过程略。请参见本示例的配置文件。

配置文件

- AR1的配置文件

```
#
vlan batch 20 30
sep segment 1
 control-vlan 10
 protected-instance all
#
interface GigabitEthernet1/0/1
 Eth-Trunk 1
#
interface GigabitEthernet1/0/2
 Eth-Trunk 1
#
interface Eth-Trunk1
 port hybrid tagged vlan 10 20 30
 stp disable
 sep segment 1
#
interface GigabitEthernet1/0/0
 port hybrid tagged vlan 10 20 30
 stp disable
 sep segment 1 edge primary
#
interface Virtual-Ethernet0/0/0
 portswitch
 port link-type access
 port default vlan 30
#
interface Virtual-Ethernet0/0/1
 portswitch
 port link-type trunk
 port trunk allow-pass vlan 30
#
interface GigabitEthernet0/0/1
 ip address 10.1.1.2 255.255.255.0
#
interface GigabitEthernet0/0/2
 ip address 10.10.2.2 255.255.255.0
#
interface Tunnel0/0/0
 ip address 10.20.0.2 255.255.255.0
 tunnel-protocol gre
 source 172.16.1.100
 destination 172.17.1.100
 map interface Virtual-Ethernet0/0/1
#
interface Tunnel0/0/1
 ip address 10.20.1.2 255.255.255.0
 tunnel-protocol gre
 source 10.1.1.2
 destination 10.2.1.1
 mtu 1424
 replication path-group g1
#
interface Tunnel0/0/2
 ip address 10.20.2.2 255.255.255.0
 tunnel-protocol gre
 source 10.10.2.2
 destination 10.20.2.1
 mtu 1424
#
interface Vlanif20
 ip address 172.16.1.1 255.255.255.0
 vrrp vrid 1 virtual-ip 172.16.1.100
 vrrp vrid 1 priority 120
```

```
 vrrp vrid 1 track bfd-session 3 reduced 15
 vrrp vrid 1 track bfd-session 5 reduced 15
#
interface vlanif 30
 tcp adjust-mss 1200
 map interface Virtual-Ethernet0/0/0
#
ip route-static 172.17.1.0 255.255.255.0 Tunnel0/0/1
ip route-static 172.17.1.0 255.255.255.0 Tunnel0/0/2 preference 100
ip route-static 10.2.1.0 255.255.255.0 10.1.1.1
ip route-static 10.20.2.0 255.255.255.0 10.10.2.1
#
replication path-group g1
 path Tunnel0/0/2 priority 1
#
bfd tunnel1 bind peer-ip 10.20.1.1 source-ip 10.20.1.2
 discriminator local 3
 discriminator remote 4
 commit
bfd tunnel2 bind peer-ip 10.20.2.1 source-ip 10.20.2.2
 discriminator local 5
 discriminator remote 6
 commit
#
return
```

- AR2的配置文件

```
#
vlan batch 20 30
sep segment 1
 control-vlan 10
 protected-instance all
#
interface GigabitEthernet1/0/0
 Eth-Trunk 1
#
interface GigabitEthernet1/0/2
 Eth-Trunk 1
#
interface Eth-Trunk1
 port hybrid tagged vlan 10 20 30
 stp disable
 sep segment 1
#
interface GigabitEthernet1/0/1
 port hybrid tagged vlan 10 20 30
 stp disable
 sep segment 1 edge secondary
#
interface Virtual-Ethernet0/0/0
 portswitch
 port link-type access
 port default vlan 30
#
interface Virtual-Ethernet0/0/1
 portswitch
 port link-type trunk
 port trunk allow-pass vlan 30
#
interface GigabitEthernet0/0/1
 ip address 10.3.1.2 255.255.255.0
#
interface GigabitEthernet0/0/2
 ip address 10.30.2.2 255.255.255.0
#
interface Tunnel0/0/0
 ip address 10.20.0.2 255.255.255.0
 tunnel-protocol gre
 source 172.16.1.100
 destination 172.17.1.100
```

```
 map interface Virtual-Ethernet0/0/1
#
interface Tunnel0/0/1
 ip address 10.20.1.2 255.255.255.0
 tunnel-protocol gre
 source 10.3.1.2
 destination 10.4.1.1
 mtu 1424
 replication path-group g1
#
interface Tunnel0/0/2
 ip address 10.20.2.2 255.255.255.0
 tunnel-protocol gre
 source 10.30.2.2
 destination 10.40.2.1
 mtu 1424
#
interface Vlanif20
 ip address 172.16.1.2 255.255.255.0
 vrrp vrid 1 virtual-ip 172.16.1.100
#
interface vlanif 30
 tcp adjust-mss 1200
 map interface Virtual-Ethernet0/0/0
#
ip route-static 172.16.1.0 255.255.255.0 Tunnel0/0/1
ip route-static 172.16.1.0 255.255.255.0 Tunnel0/0/2 preference 100
ip route-static 10.4.1.0 255.255.255.0 10.3.1.1
ip route-static 10.40.2.0 255.255.255.0 10.30.2.1
#
replication path-group g1
 path Tunnel0/0/2 priority 1
#
return
```

- AR3的配置文件

```
#
vlan batch 20 30
sep segment 1
 control-vlan 10
 protected-instance all
#
interface GigabitEthernet1/0/0
 Eth-Trunk 1
#
interface GigabitEthernet1/0/2
 Eth-Trunk 1
#
interface Eth-Trunk1
 port hybrid tagged vlan 10 20 30
 stp disable
 sep segment 1
#
interface GigabitEthernet1/0/0
 port hybrid tagged vlan 10 20 30
 stp disable
 sep segment 1 edge primary
#
interface Virtual-Ethernet0/0/0
 portswitch
 port link-type access
 port default vlan 30
#
interface Virtual-Ethernet0/0/1
 portswitch
 port link-type trunk
 port trunk allow-pass vlan 30
#
interface GigabitEthernet0/0/1
 ip address 10.2.1.1 255.255.255.0
```

```
#
interface GigabitEthernet0/0/2
 ip address 10.20.2.1 255.255.255.0
#
interface Tunnel0/0/0
 ip address 10.20.0.1 255.255.255.0
 tunnel-protocol gre
 source 172.17.1.100
 destination 172.16.1.100
 map interface Virtual-Ethernet0/0/1
#
interface Tunnel0/0/1
 ip address 10.20.1.1 255.255.255.0
 tunnel-protocol gre
 source 10.2.1.1
 destination 10.1.1.2
 mtu 1424
 replication path-group g1
#
interface Tunnel0/0/2
 ip address 10.20.2.1 255.255.255.0
 tunnel-protocol gre
 source 10.20.2.1
 destination 10.10.2.2
 mtu 1424
#
interface Vlanif20
 ip address 172.17.1.1 255.255.255.0
 vrrp vrid 1 virtual-ip 172.17.1.100
 vrrp vrid 1 priority 120
 vrrp vrid 1 track bfd-session 4 reduced 15
 vrrp vrid 1 track bfd-session 6 reduced 15

#
interface vlanif 30
 tcp adjust-mss 1200
 map interface Virtual-Ethernet0/0/0
#
ip route-static 172.16.1.0 255.255.255.0 Tunnel0/0/1
ip route-static 172.16.1.0 255.255.255.0 Tunnel0/0/2 preference 100
ip route-static 10.1.1.0 255.255.255.0 10.2.1.2
ip route-static 10.10.2.0 255.255.255.0 10.20.2.2
#
replication path-group g1
 path Tunnel0/0/2 priority 1
#
bfd tunnel1 bind peer-ip 10.20.1.2 source-ip 10.20.1.1
 discriminator local 4
 discriminator remote 3
 commit
bfd tunnel2 bind peer-ip 10.20.2.2 source-ip 10.20.2.1
 discriminator local 6
 discriminator remote 5
 commit
#
return
```

- AR4的配置文件

```
#
vlan batch 20 30
sep segment 1
 control-vlan 10
 protected-instance all
#
interface GigabitEthernet1/0/0
 Eth-Trunk 1
#
interface GigabitEthernet1/0/2
 Eth-Trunk 1
#
```

```
interface Eth-Trunk1
 port hybrid tagged vlan 10 20 30
 stp disable
 sep segment 1
#
interface GigabitEthernet1/0/1
 port hybrid tagged vlan 10 20 30
 stp disable
 sep segment 1 edge secondary
#
interface Virtual-Ethernet0/0/0
 portswitch
 port link-type access
 port default vlan 30
#
interface Virtual-Ethernet0/0/1
 portswitch
 port link-type trunk
 port trunk allow-pass vlan 30
#
interface GigabitEthernet0/0/1
 ip address 10.4.1.1 255.255.255.0
#
interface GigabitEthernet0/0/2
 ip address 10.40.2.1 255.255.255.0
#
interface Tunnel0/0/0
 ip address 10.20.0.1 255.255.255.0
 tunnel-protocol gre
 source 172.17.1.100
 destination 172.16.1.100
 map interface Virtual-Ethernet0/0/1
#
interface Tunnel0/0/1
 ip address 10.20.1.1 255.255.255.0
 tunnel-protocol gre
 source 10.4.1.1
 destination 10.3.1.2
 mtu 1424
 replication path-group g1
#
interface Tunnel0/0/2
 ip address 10.20.2.1 255.255.255.0
 tunnel-protocol gre
 source 10.40.2.1
 destination 10.30.2.2
 mtu 1424
#
interface Vlanif20
 ip address 172.17.1.2 255.255.255.0
 vrrp vrid 1 virtual-ip 172.17.1.100
#
interface vlanif 30
 tcp adjust-mss 1200
 map interface Virtual-Ethernet0/0/0
#
ip route-static 172.16.1.0 255.255.255.0 Tunnel0/0/1
ip route-static 172.16.1.0 255.255.255.0 Tunnel0/0/2 preference 100
ip route-static 10.3.1.0 255.255.255.0 10.4.1.2
ip route-static 10.30.2.0 255.255.255.0 10.40.2.2
#
replication path-group g1
 path Tunnel0/0/2 priority 1
#
return
```

- SwitchE的配置文件

```
#
vlan batch 20 30
sep segment 1
```

```
 control-vlan 10
 protected-instance all
#
interface GigabitEthernet1/0/0
 port hybrid tagged vlan 10 20 30
 stp disable
 sep segment 1 priority 128
#
interface GigabitEthernet1/0/1
 port hybrid tagged vlan 10 20 30
 stp disable
 sep segment 1
#
return
```

- SwitchF的配置文件

```
#
vlan batch 20 30
sep segment 1
 control-vlan 10
 protected-instance all
#
interface GigabitEthernet1/0/0
 port hybrid tagged vlan 10 20 30
 stp disable
 sep segment 1 priority 128
#
interface GigabitEthernet1/0/1
 port hybrid tagged vlan 10 20 30
 stp disable
 sep segment 1
#
return
```

7.2.8 配置 5G 场景二层多发选收示例

组网需求

如图7-11所示，AR1和AR2之间通过Internet网络互通，为了提高链路可靠性，AR1部署了两条上行链路接入Internet。其中5G链路作为主链路，以太有线链路作为备链路。用户希望将5G链路的报文复制到以太链路发送出去，防止出现业务中断的现象。并且分支和总部可以传输原始以太报文（如工业控制的PLC报文），采用二层隧道封装。

图 7-11 配置 5G 场景二层多发选收组网图

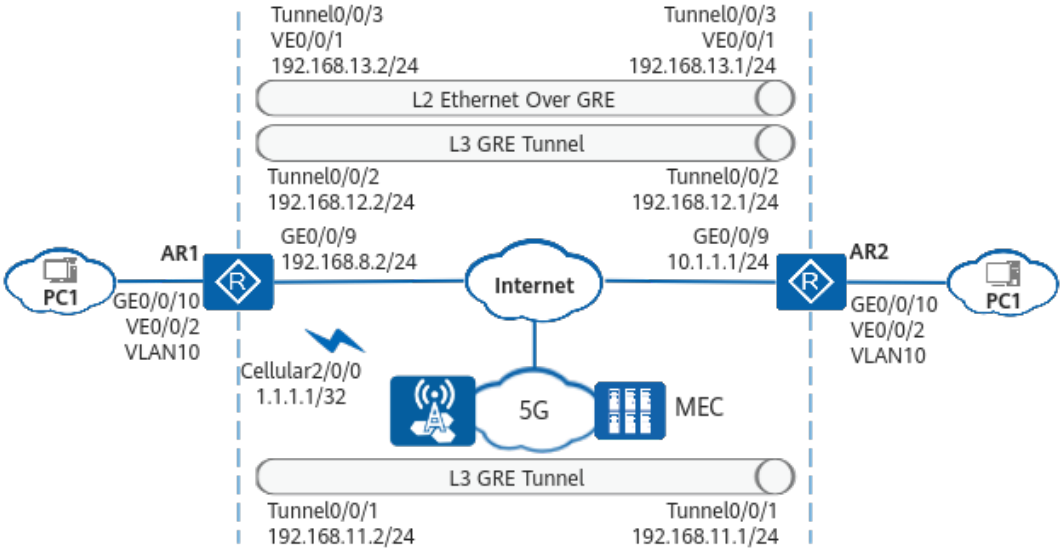

数据准备

表 7-13 数据准备表

项目	数据	说明
分支AR1 LAN侧接口信息	LAN侧物理接口：GE0/0/10 绑定的VE接口：VE0/0/2 所属VLAN：10	分支AR1与分支用户之间的链路信息。
分支AR1 WAN侧接口信息	主链路5G Cellular接口：Cellular2/0/0 IP地址：1.1.1.1/32 绑定VPN实例：vpn1 备链路物理接口：GE0/0/9 IP地址：192.168.8.2/24 绑定VPN实例：vpn2	分支AR1和总部AR2之间的链路信息。
分支AR1 Tunnel0/0/1接口信息	IP地址：192.168.11.2/24 源接口：Cellular2/0/0	分支AR1和总部AR2之间的L3 GRE隧道信息。
分支AR1 Tunnel0/0/2接口信息	IP地址：192.168.12.2/24 源接口：GE0/0/9	分支AR1和总部AR2之间的L3 GRE隧道信息。
分支AR1 Tunnel0/0/3接口信息	IP地址：192.168.13.2/24 源接口：LoopBack1 绑定的VE接口：VE0/0/1	分支AR1和总部AR2之间的Ethernet over GRE隧道信息。

项目	数据	说明
总部AR2 LAN侧接口信息	LAN侧物理接口：GE0/0/10 绑定的VE接口：VE0/0/2 所属VLAN：10	总部AR2与总部用户之间的链路信息。
总部AR2 WAN侧接口信息	WAN侧物理接口：GE0/0/9 IP地址：10.1.1.1/24	总部AR2与分支AR1之间的链路信息。
总部AR2 Tunnel0/0/1接口信息	IP地址：192.168.11.1/24 源接口：GE0/0/9	总部AR2和分支AR1之间的L3 GRE隧道信息。
总部AR2 Tunnel0/0/2接口信息	IP地址：192.168.12.1/24 源接口：GE0/0/9	总部AR2和分支AR1之间的L3 GRE隧道信息。
总部AR2 Tunnel0/0/3接口信息	IP地址：192.168.13.1/24 源接口：LoopBack1 绑定的VE接口：VE0/0/1	总部AR2和分支AR1之间的Ethernet over GRE隧道信息。

MTU 及 TCP MSS 参数配置说明

为了减少网络传输中不必要的分片和重组，网络规划时需要合理设置终端发出的报文大小，设置依据如下：

- 对于UDP报文，可以调节发送端的MTU值，如果发送端不支持调节MTU值，则需要在5G AR设备上调节MTU值，以确保报文在网络中传输时不会产生二次分片。
- 对于TCP报文，可以配置5G AR设备的TCP MSS值，通过修改应用层报文数据包的长度来避免报文分片。

在5G2B专线场景中，TCP MSS取值比较简单，在隧道两端AR设备的LAN侧接入物理口或VLANIF口上配置TCP MSS为推荐值1200。MTU取值相对复杂，与如下三个参数有关，具体的配置方法请参见**表2** 。

- 单层GRE隧道组网，报文经过5G AR设备后会增加28字节，即单层GRE头长度为28字节。
- 双层GRE隧道组网，报文经过5G AR设备后会增加56字节，即双层GRE头长度为56字节。
- 5G网络中GTP封装会增加至少40字节，其中IP头20字节，UDP头8字节，GTP消息封装12字节。考虑到GTP支持扩展消息头，建议多预留1至2个扩展消息头长度（4或8字节）作为缓冲，即GTP封装头长度最大为48字节。

表 7-14 MTU 参数配置方法

组网场景	在发送端调节MTU方值	或者在5G AR上调节MTU值
单层GRE隧道组网	发送端MTU值=网络中设备允许通过MTU值减去单层GRE头长度28，再减去GTP封装头长度48，即发送端MTU值=MTU-28-48。	5G接口MTU值=网络中设备允许通过MTU值减去GTP封装头长度，即5G接口MTU值=MTU-48。
双层GRE隧道组网	发送端MTU值=网络中设备允许通过MTU值减去双层GRE头长度56，再减去GTP封装头长度48，即发送端MTU值=MTU-56-48。	最外层L3 GRE隧道接口MTU值=网络中设备允许通过MTU值减去单层GRE头长度28，再减去GTP封装头长度48，即最外层L3 GRE隧道接口MTU值=MTU-28-48。本例中，MTU取值为1500。

配置思路

在5G链路上构建Tunnel0/0/1接口，在以太链路上构建Tunnel0/0/2接口，在Tunnel0/0/1接口配置多发选收功能，将Tunnel0/0/1接口下的报文复制到Tunnel0/0/2接口发送出去，同时配置联动BFD会话，实现设备间链路故障的快速检测。

本例配置主要思路是：

1. 在AR1上配置不同的VPN实例，与AR1相连的接口和相应的VPN实例绑定，接入VPN用户。
2. 配置设备间网络互连。
3. 配置BFD会话，实现设备间链路故障的快速检测。
4. 配置Tunnel接口并配置多发选收功能。
5. 配置静态路由，并联动BFD会话。

说明

用户可以根据现网实际情况配置BFD报文的接收和发送间隔。

操作步骤

1. 在AR1上配置不同的VPN实例，与AR1相连的接口和相应的VPN实例绑定，接入VPN用户。

```
[AR1] ip vpn-instance vpn1
[AR1-vpn-instance-vpn1] ipv4-family
[AR1-vpn-instance-vpn1-af-ipv4] route-distinguisher 1:1
[AR1-vpn-instance-vpn1-af-ipv4] vpn-target 1:1 export-extcommunity
[AR1-vpn-instance-vpn1-af-ipv4] vpn-target 1:1 import-extcommunity
[AR1-vpn-instance-vpn1-af-ipv4] quit
[AR1-vpn-instance-vpn1] quit
[AR1] ip vpn-instance vpn2
[AR1-vpn-instance-vpn2] ipv4-family
[AR1-vpn-instance-vpn2-af-ipv4] route-distinguisher 2:2
[AR1-vpn-instance-vpn2-af-ipv4] vpn-target 2:2 export-extcommunity
[AR1-vpn-instance-vpn2-af-ipv4] vpn-target 2:2 import-extcommunity
[AR1-vpn-instance-vpn2-af-ipv4] quit
[AR1-vpn-instance-vpn2] quit
[AR1] dialer-rule
[AR1-dialer-rule] dialer-rule 1 ip permit
```

```
[AR1-dialer-rule] quit
[AR1] apn profile 3gnet
[AR1-apn-profile-3gnet] quit
[AR1] interface Cellular 2/0/0
[AR1-Cellular2/0/0] ip binding vpn-instance vpn1
[AR1-Cellular2/0/0] dialer enable-circular
[AR1-Cellular2/0/0] dialer-group 1
[AR1-Cellular2/0/0] dialer timer autodial 10
[AR1-Cellular2/0/0] apn-profile 3gnet
[AR1-Cellular2/0/0] profile create default 3gnet
[AR1-Cellular2/0/0] ip address negotiate
[AR1-Cellular2/0/0] quit
[AR1] interface GigabitEthernet 0/0/9
[AR1-GigabitEthernet0/0/9] ip binding vpn-instance vpn2
[AR1-GigabitEthernet0/0/9] ip address 192.168.8.2 255.255.255.0
[AR1-GigabitEthernet0/0/9] quit
[AR1] ip route-static vpn-instance vpn1 0.0.0.0 0.0.0.0 Cellular2/0/0
[AR1] ip route-static vpn-instance vpn2 0.0.0.0 0.0.0.0 192.168.8.1
```

配置AR2。

```
[AR2] interface GigabitEthernet 0/0/9
[AR2-GigabitEthernet0/0/9] ip address 10.1.1.1 24
[AR2-GigabitEthernet0/0/9] quit
[AR2] ip route-static 0.0.0.0 0.0.0.0 10.1.1.2
```

2. 配置设备间网络互连。

配置AR1。

```
[AR1] interface LoopBack1
[AR1-LoopBack1] ip address 2.2.2.2 255.255.255.255
[AR1-LoopBack1] quit
[AR1] vlan batch 10
[AR1] interface Virtual-Ethernet 0/0/1
[AR1-Virtual-Ethernet0/0/1] portswitch
[AR1-Virtual-Ethernet0/0/1] port link-type trunk
[AR1-Virtual-Ethernet0/0/1] port trunk allow-pass vlan 10
[AR1-Virtual-Ethernet0/0/1] quit
[AR1] interface Virtual-Ethernet 0/0/2
[AR1-Virtual-Ethernet0/0/2] portswitch
[AR1-Virtual-Ethernet0/0/2] port link-type access
[AR1-Virtual-Ethernet0/0/2] port default vlan 10
[AR1-Virtual-Ethernet0/0/2] quit
[AR1] interface Tunnel 0/0/3
[AR1-Tunnel0/0/3] ip address 192.168.13.2 255.255.255.0
[AR1-Tunnel0/0/3] tunnel-protocol gre
[AR1-Tunnel0/0/3] gre key plain 3
[AR1-Tunnel0/0/3] source LoopBack1
[AR1-Tunnel0/0/3] destination 11.11.11.11
[AR1-Tunnel0/0/3] map interface Virtual-Ethernet 0/0/1
[AR1-Tunnel0/0/3] quit
[AR1] interface gigabitethernet 0/0/10
[AR1-GigabitEthernet0/0/10] map interface Virtual-Ethernet 0/0/2
[AR1-GigabitEthernet0/0/10] tcp adjust-mss 1200
[AR1-GigabitEthernet0/0/10] quit
```

配置AR2。

```
[AR2] interface LoopBack1
[AR2-LoopBack1] ip address 11.11.11.11 255.255.255.255
[AR2-LoopBack1] quit
[AR2] vlan batch 10
[AR2] interface Virtual-Ethernet 0/0/1
[AR2-Virtual-Ethernet0/0/1] portswitch
[AR2-Virtual-Ethernet0/0/1] port link-type trunk
[AR2-Virtual-Ethernet0/0/1] port trunk allow-pass vlan 10
[AR2-Virtual-Ethernet0/0/1] quit
[AR2] interface Virtual-Ethernet 0/0/2
[AR2-Virtual-Ethernet0/0/2] portswitch
[AR2-Virtual-Ethernet0/0/2] port link-type access
[AR2-Virtual-Ethernet0/0/2] port default vlan 10
[AR2-Virtual-Ethernet0/0/2] quit
```

```
[AR2] interface Tunnel 0/0/3
[AR2-Tunnel0/0/3] ip address 192.168.13.1 255.255.255.0
[AR2-Tunnel0/0/3] tunnel-protocol gre
[AR2-Tunnel0/0/3] gre key plain 3
[AR2-Tunnel0/0/3] source LoopBack1
[AR2-Tunnel0/0/3] destination 2.2.2.2
[AR2-Tunnel0/0/3] map interface Virtual-Ethernet 0/0/1
[AR2-Tunnel0/0/3] quit
[AR2] interface gigabitethernet 0/0/10
[AR2-GigabitEthernet0/0/10] map interface Virtual-Ethernet 0/0/2
[AR2-GigabitEthernet0/0/10] tcp adjust-mss 1200
[AR2-GigabitEthernet0/0/10] quit
```

3. 配置BFD会话，实现设备间链路故障的快速检测。

   # 配置AR1。

```
[AR1] bfd
[AR1-bfd] quit
[AR1] bfd atob1 bind peer-ip 192.168.11.1 source-ip 192.168.11.2
[AR1-bfd-session-atob1] discriminator local 2
[AR1-bfd-session-atob1] discriminator remote 1
[AR1-bfd-session-atob1] commit
[AR1-bfd-session-atob1] quit
[AR1] bfd atob2 bind peer-ip 192.168.12.1 source-ip 192.168.12.2
[AR1-bfd-session-atob2] discriminator local 4
[AR1-bfd-session-atob2] discriminator remote 3
[AR1-bfd-session-atob2] commit
[AR1-bfd-session-atob2] quit
```

   # 配置AR2。

```
[AR2] bfd
[AR2-bfd] quit
[AR2] bfd btoa1 bind peer-ip 192.168.11.2 source-ip 192.168.11.1
[AR2-bfd-session-btoa1] discriminator local 1
[AR2-bfd-session-btoa1] discriminator remote 2
[AR2-bfd-session-btoa1] commit
[AR2-bfd-session-btoa1] quit
[AR2] bfd btoa2 bind peer-ip 192.168.12.2 source-ip 192.168.12.1
[AR2-bfd-session-btoa2] discriminator local 3
[AR2-bfd-session-btoa2] discriminator remote 4
[AR2-bfd-session-btoa2] commit
[AR2-bfd-session-btoa2] quit
```

4. 配置Tunnel接口并配置多发选收功能。

   # 配置AR1。

```
[AR1] interface tunnel 0/0/1
[AR1-Tunnel0/0/1] tunnel-protocol gre
[AR1-Tunnel0/0/1] ip address 192.168.11.2 255.255.255.0
[AR1-Tunnel0/0/1] gre key plain 1
[AR1-Tunnel0/0/1] source Cellular2/0/0
[AR1-Tunnel0/0/1] destination vpn-instance vpn1 10.1.1.1
[AR1-Tunnel0/0/1] mtu 1424
[AR1-Tunnel0/0/1] quit
[AR1] interface tunnel 0/0/2
[AR1-Tunnel0/0/2] tunnel-protocol gre
[AR1-Tunnel0/0/2] ip address 192.168.12.2 255.255.255.0
[AR1-Tunnel0/0/2] gre key plain 2
[AR1-Tunnel0/0/2] source GigabitEthernet0/0/9
[AR1-Tunnel0/0/2] destination vpn-instance vpn2 10.1.1.1
[AR1-Tunnel0/0/2] mtu 1424
[AR1-Tunnel0/0/2] quit
[AR1] replication path-group g1
[AR1-replication-path-group-g1] path Tunnel 0/0/1 priority 1 track bfd-session atob1
[AR1-replication-path-group-g1] path Tunnel 0/0/2 priority 2 track bfd-session atob2
[AR1-replication-path-group-g1] quit
[AR1] interface tunnel 0/0/1
[AR1-Tunnel0/0/1] replication path-group g1
[AR1-Tunnel0/0/1] quit
[AR1] interface tunnel 0/0/2
```

```
[AR1-Tunnel0/0/2] replication path-group g1
[AR1-Tunnel0/0/2] quit
```

配置AR2。

```
[AR2] interface tunnel 0/0/1
[AR2-Tunnel0/0/1] tunnel-protocol gre
[AR2-Tunnel0/0/1] ip address 192.168.11.1 255.255.255.0
[AR2-Tunnel0/0/1] gre key plain 1
[AR2-Tunnel0/0/1] source GigabitEthernet0/0/9
[AR2-Tunnel0/0/1] destination 1.1.1.1
[AR2-Tunnel0/0/1] mtu 1424
[AR2-Tunnel0/0/1] quit
[AR2] interface tunnel 0/0/2
[AR2-Tunnel0/0/2] tunnel-protocol gre
[AR2-Tunnel0/0/2] ip address 192.168.12.1 255.255.255.0
[AR2-Tunnel0/0/2] gre key plain 2
[AR2-Tunnel0/0/2] source GigabitEthernet0/0/9
[AR2-Tunnel0/0/2] destination 192.168.8.2
[AR2-Tunnel0/0/2] mtu 1424
[AR2-Tunnel0/0/2] quit
[AR2] replication path-group g1
[AR2-replication-path-group-g1] path Tunnel 0/0/1 priority 1 track bfd-session btoa1
[AR2-replication-path-group-g1] path Tunnel 0/0/2 priority 2 track bfd-session btoa2
[AR2-replication-path-group-g1] quit
[AR2] interface tunnel 0/0/1
[AR2-Tunnel0/0/1] replication path-group g1
[AR2-Tunnel0/0/1] quit
[AR2] interface tunnel 0/0/2
[AR2-Tunnel0/0/2] replication path-group g1
[AR2-Tunnel0/0/2] quit
```

5. 配置静态路由，5G链路和以太链路的隧道作为等价路由，并联动BFD会话。

   # 配置AR1。

```
[AR1] ip route-static 11.11.11.11 255.255.255.255 Tunnel0/0/1 track bfd-session atob1
[AR1] ip route-static 11.11.11.11 255.255.255.255 Tunnel0/0/2 track bfd-session atob2
```

   # 配置AR2。

```
[AR2] ip route-static 2.2.2.2 255.255.255.255 Tunnel0/0/1 track bfd-session btoa1
[AR2] ip route-static 2.2.2.2 255.255.255.255 Tunnel0/0/2 track bfd-session btoa2
```

配置文件

- AR1的配置文件

```
#
ip vpn-instance vpn1
 ipv4-family
 route-distinguisher 1:1
 vpn-target 1:1 export-extcommunity
 vpn-target 1:1 import-extcommunity
#
ip vpn-instance vpn2
 ipv4-family
 route-distinguisher 2:2
 vpn-target 2:2 export-extcommunity
 vpn-target 2:2 import-extcommunity
#
dialer-rule
 dialer-rule 1 ip permit
#
apn profile 3gnet
#
interface Cellular2/0/0
 ip binding vpn-instance vpn1
 dialer enable-circular
 dialer-group 1
 dialer timer autodial 10
 apn-profile 3gnet
 profile create default 3gnet
```

```
 ip address negotiate
#
interface GigabitEthernet0/0/9
 ip binding vpn-instance vpn2
 ip address 192.168.8.2 255.255.255.0
#
ip route-static vpn-instance vpn1 0.0.0.0 0.0.0.0 Cellular2/0/0
ip route-static vpn-instance vpn2 0.0.0.0 0.0.0.0 192.168.8.1
#
interface Tunnel0/0/1
 ip address 192.168.11.2 255.255.255.0
 tunnel-protocol gre
 gre key plain 1
 source Cellular2/0/0
 destination vpn-instance vpn1 10.1.1.1
 replication path-group g1
 mtu 1424
#
interface Tunnel0/0/2
 ip address 192.168.12.2 255.255.255.0
 tunnel-protocol gre
 gre key plain 2
 source GigabitEthernet0/0/9
 destination vpn-instance vpn2 10.1.1.1
 replication path-group g1
 mtu 1424
#
bfd
#
bfd atob1 bind peer-ip 192.168.11.1 source-ip 192.168.11.2
 discriminator local 2
 discriminator remote 1
 commit
#
bfd atob2 bind peer-ip 192.168.12.1 source-ip 192.168.12.2
 discriminator local 4
 discriminator remote 3
 commit
#
replication path-group g1
 path Tunnel0/0/1 priority 1 track bfd-session atob1
 path Tunnel0/0/2 priority 2 track bfd-session atob2
#
interface LoopBack1
 ip address 2.2.2.2 255.255.255.255
#
ip route-static 11.11.11.11 255.255.255.255 Tunnel0/0/1 track bfd-session atob1
ip route-static 11.11.11.11 255.255.255.255 Tunnel0/0/2 track bfd-session atob1
#
vlan batch 10
#
interface Virtual-Ethernet0/0/1
 portswitch
 port link-type trunk
 port trunk allow-pass vlan 10
#
interface Virtual-Ethernet0/0/2
 portswitch
 port link-type access
 port default vlan 10
#
interface Tunnel0/0/3
 ip address 192.168.13.2 255.255.255.0
 tunnel-protocol gre
 gre key plain 3
 source LoopBack1
 destination 11.11.11.11
 map interface Virtual-Ethernet0/0/1
#
```

```
interface GigabitEthernet0/0/10
 map interface Virtual-Ethernet0/0/2
 tcp adjust-mss 1200
#
```

- AR2的配置文件

```
#
interface GigabitEthernet0/0/9
 ip address 10.1.1.1 255.255.255.0
#
ip route-static 0.0.0.0 0.0.0.0 10.1.1.2
#
interface Tunnel0/0/1
 ip address 192.168.11.1 255.255.255.0
 tunnel-protocol gre
 gre key plain 1
 source GigabitEthernet0/0/9
 destination 20.20.20.20
 replication path-group g1
 mtu 1424
#
interface Tunnel0/0/2
 ip address 192.168.12.1 255.255.255.0
 tunnel-protocol gre
 gre key plain 2
 source GigabitEthernet0/0/9
 destination 192.168.8.2
 replication path-group g1
 mtu 1424
#
bfd
#
bfd btoa1 bind peer-ip 192.168.11.2 source-ip 192.168.11.1
 discriminator local 1
 discriminator remote 2
 commit
#
bfd btoa2 bind peer-ip 192.168.12.2 source-ip 192.168.12.1
 discriminator local 3
 discriminator remote 4
 commit
#
replication path-group g1
 path Tunnel0/0/1 priority 1 track bfd-session btoa1
 path Tunnel0/0/2 priority 2 track bfd-session btoa2
#
interface LoopBack1
 ip address 11.11.11.11 255.255.255.255
#
ip route-static 2.2.2.2 255.255.255.255 Tunnel0/0/1 track bfd-session btoa1
ip route-static 2.2.2.2 255.255.255.255 Tunnel0/0/2 track bfd-session btoa2
#
vlan batch 10
#
interface Virtual-Ethernet0/0/1
 portswitch
 port link-type trunk
 port trunk allow-pass vlan 10
#
interface Virtual-Ethernet0/0/2
 portswitch
 port link-type access
 port default vlan 10
#
interface Tunnel0/0/3
 ip address 192.168.13.1 255.255.255.0
 tunnel-protocol gre
 gre key plain 3
 source LoopBack1
 destination 2.2.2.2
```

```
 map interface Virtual-Ethernet0/0/1
#
interface GigabitEthernet0/0/10
 map interface Virtual-Ethernet0/0/2
 tcp adjust-mss 1200
#
```

7.2.9 配置 5G 场景二层重定向多发选收示例

组网需求

如图7-12所示，企业分支和总部之间通过Internet网络互通，企业分支使用AR1作为出口网关。为了提高链路可靠性，AR1部署了两条上行链路接入Internet。其中5G链路作为主链路，以太有线链路作为备链路。用户希望将5G链路的报文复制到以太链路发送出去，报文复制过程忽略接口状态和路由状态，最大程度保证业务连续性。并且分支和总部可以传输原始以太报文（如工业控制的PLC报文，采用二层隧道封装。

图 7-12 配置 5G 场景二层重定向多发选收组网图

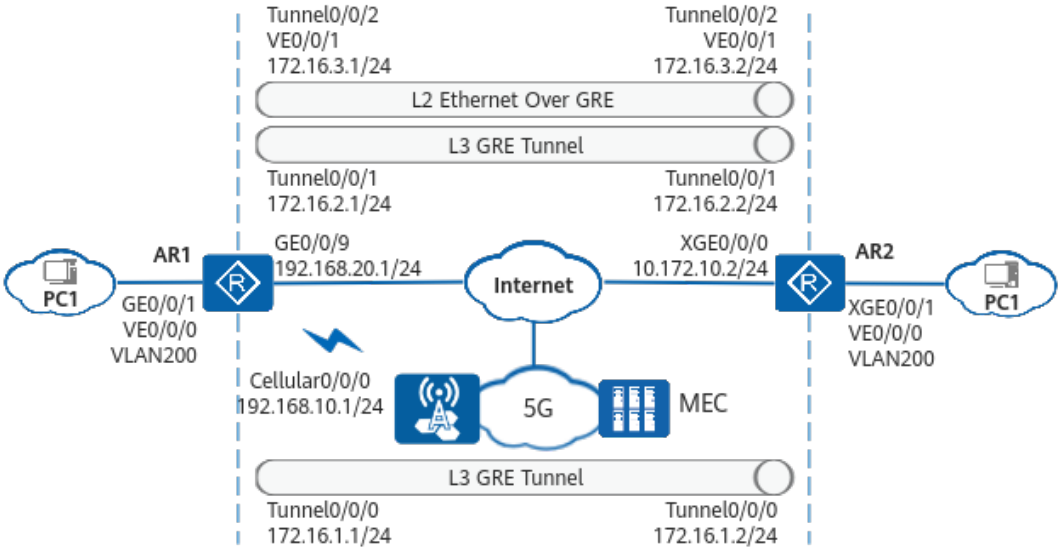

数据准备

表 7-15 数据准备表

项目	数据	说明
分支AR1 LAN侧接口信息	LAN侧物理接口：GE0/0/1 绑定的VE接口：VE0/0/0 所属VLAN：200	分支AR1与分支用户之间的链路信息。

项目	数据	说明
分支AR1 WAN侧接口信息	主链路5G Cellular接口：Cellular0/0/0 IP地址：192.168.10.1/24 绑定VPN实例：wan1 备链路物理接口：GE0/0/9 IP地址：192.168.20.1/24 绑定VPN实例：wan2	分支AR1和总部AR2之间的链路信息。
分支AR1 Tunnel0/0/0接口信息	IP地址：172.16.1.1/24 源接口：Cellular0/0/0	分支AR1和总部AR2之间的L3 GRE隧道信息。
分支AR1 Tunnel0/0/1接口信息	IP地址：172.16.2.1/24 源接口：GE0/0/9	分支AR1和总部AR2之间的L3 GRE隧道信息。
分支AR1 Tunnel0/0/2接口信息	IP地址：172.16.3.1/24 源接口：LoopBack0 绑定的VE接口：VE0/0/1	分支AR1和总部AR2之间的Ethernet over GRE隧道信息。
总部AR2 LAN侧接口信息	LAN侧物理接口：XGE0/0/1 绑定的VE接口：VE0/0/0 所属VLAN：200	总部AR2与总部用户之间的链路信息。
总部AR2 WAN侧接口信息	WAN侧物理接口：XGE0/0/0 IP地址：10.172.10.2/24	总部AR2与分支AR1之间的链路信息。
总部AR2 Tunnel0/0/0接口信息	IP地址：172.16.1.2/24 源接口：XGE0/0/0	总部AR2和分支AR1之间的L3 GRE隧道信息。
总部AR2 Tunnel0/0/1接口信息	IP地址：172.16.2.2/24 源接口：XGE0/0/0	总部AR2和分支AR1之间的L3 GRE隧道信息。
总部AR2 Tunnel0/0/2接口信息	IP地址：172.16.3.2/24 源接口：LoopBack0 绑定的VE接口：VE0/0/1	总部AR2和分支AR1之间的Ethernet over GRE隧道信息。

MTU 及 TCP MSS 参数配置说明

为了减少网络传输中不必要的分片和重组，网络规划时需要合理设置终端发出的报文大小，设置依据如下：

- 对于UDP报文，可以调节发送端的MTU值，如果发送端不支持调节MTU值，则需要在5G AR设备上调节MTU值，以确保报文在网络中传输时不会产生二次分片。
- 对于TCP报文，可以配置5G AR设备的TCP MSS值，通过修改应用层报文数据包的长度来避免报文分片。

在5G2B专线场景中，TCP MSS取值比较简单，在隧道两端AR设备的LAN侧接入物理口或VLANIF口上配置TCP MSS为推荐值1200。MTU取值相对复杂，与如下三个参数有关，具体的配置方法请参见**表2** 。

- 单层GRE隧道组网，报文经过5G AR设备后会增加28字节，即单层GRE头长度为28字节。
- 双层GRE隧道组网，报文经过5G AR设备后会增加56字节，即双层GRE头长度为56字节。
- 5G网络中GTP封装会增加至少40字节，其中IP头20字节，UDP头8字节，GTP消息封装12字节。考虑到GTP支持扩展消息头，建议多预留1至2个扩展消息头长度（4或8字节）作为缓冲，即GTP封装头长度最大为48字节。

表 7-16 MTU 参数配置方法

组网场景	在发送端调节MTU方值	或者在5G AR上调节MTU值
单层GRE隧道组网	发送端MTU值=网络中设备允许通过MTU值减去单层GRE头长度28，再减去GTP封装头长度48，即发送端MTU值=MTU-28-48。	5G接口MTU值=网络中设备允许通过MTU值减去GTP封装头长度，即5G接口MTU值=MTU-48。
双层GRE隧道组网	发送端MTU值=网络中设备允许通过MTU值减去双层GRE头长度56，再减去GTP封装头长度48，即发送端MTU值=MTU-56-48。	最外层L3 GRE隧道接口MTU值=网络中设备允许通过MTU值减去单层GRE头长度28，再减去GTP封装头长度48，即最外层L3 GRE隧道接口MTU值=MTU-28-48。本例中，MTU取值为1500。

配置思路

本例配置主要思路是：

1. 配置设备物理接口的IP地址及静态路由，实现设备之间三层网络互通，同时，在AR1上创建不同的VPN实例，实现不同VPN间的业务隔离。
2. 在AR1和AR2之间部署GRE隧道，通过静态路由指定到达对端的报文通过GRE隧道转发，实现Underlay传输网络互通，用于三层报文多发选收。
3. 配置Overlay业务网络互通。在LAN侧的接口和WAN侧的Tunnel接口上分别绑定二层VE接口，实现以太报文通过GRE隧道进行透传，且配置WAN侧Tunnel源接口为Loopback接口用于实现二层报文多发选收。
4. 在源接口为Loopback接口的内层Ethernet Over GRE隧道上配置重定向多发选收功能，并指定链路组不根据链路状态刷新选路信息，避免路由切换过程中出现的丢包现象，最大程度保证业务连续性。
5. 配置OSPF路由。

说明

- 对丢包有特殊要求的业务，比如金融、安全等相关业务，在多发选收功能仍然无法满足其要求时，可以通过引入Loopback接口的内层GRE隧道配置重定向多发选收实现报文转发，不再依赖于路由。同时通过配置链路组选路刷新的抑制周期，避免路由切换过程中出现的丢包现象，最大程度保证业务连续性。
- 多发选收功能只支持转发IPinIP、TCP、UDP、GRE、ESP和AH六种类型的报文。对于LAN侧为Ethernet二层报文的场景，可使用Loopback接口创建Ethernet Over GRE再进行多发选收功能配置，实现二层报文的多发选收。

操作步骤

1. 配置设备物理接口的IP地址及静态路由，实现设备之间三层网络互通。

   # 配置AR1。在AR1上创建不同的VPN实例，实现不同VPN间的业务隔离。

```
<Huawei> system-view
[Huawei] sysname AR1
[AR1] router id 1.1.1.1
[AR1] ip vpn-instance wan1
[AR1-vpn-instance-wan1] ipv4-family
[AR1-vpn-instance-wan1-af-ipv4] route-distinguisher 192.168.10.1:0
[AR1-vpn-instance-wan1-af-ipv4] quit
[AR1-vpn-instance-wan1] quit
[AR1] ip vpn-instance wan2
[AR1-vpn-instance-wan2] ipv4-family
[AR1-vpn-instance-wan2-af-ipv4] route-distinguisher 192.168.20.1:0
[AR1-vpn-instance-wan2-af-ipv4] quit
[AR1-vpn-instance-wan2] quit
[AR1] interface gigabitethernet 0/0/9
[AR1-GigabitEthernet0/0/9] ip binding vpn-instance wan2
[AR1-GigabitEthernet0/0/9] ip address 192.168.20.1 255.255.255.0
[AR1-GigabitEthernet0/0/9] quit
[AR1] interface Cellular 0/0/0
[AR1-Cellular0/0/0] ip binding vpn-instance wan1
[AR1-Cellular0/0/0] dialer enable-circular
[AR1-Cellular0/0/0] dialer timer autodial 10
[AR1-Cellular0/0/0] modem auto-recovery dial action modem-reboot fail-times 128
[AR1-Cellular0/0/0] modem auto-recovery services-unavailable action modem-reboot test-times
0 interval 3600
[AR1-Cellular0/0/0] ip address negotiate
[AR1-Cellular0/0/0] quit
[AR1] route-static vpn-instance wan1 10.172.0.0 255.255.0.0 Cellular0/0/0
[AR1] ip route-static vpn-instance wan2 10.172.0.0 255.255.0.0 192.168.20.254
```

   # 配置AR2。

```
<Huawei> system-view
[Huawei] sysname AR2
[AR2] router id 2.2.2.2
[AR2] interface XGigabitEthernet0/0/0
[AR2-XGigabitEthernet0/0/0] ip address 10.172.10.2 255.255.255.0
[AR2-XGigabitEthernet0/0/0] quit
[AR2] ip route-static 192.168.0.0 255.255.0.0 10.172.10.1
```

2. 在AR1和AR2之间部署GRE隧道，通过静态路由指定到达对端的报文通过GRE隧道转发，实现Underlay传输网络互通，用于三层报文多发选收。

   # 配置AR1。

```
[AR1] interface Tunnel0/0/0
[AR1-Tunnel0/0/0] description key1
[AR1-Tunnel0/0/0] ip address 172.16.1.1 255.255.255.0
[AR1-Tunnel0/0/0] tunnel-protocol gre
[AR1-Tunnel0/0/0] keepalive period 1
[AR1-Tunnel0/0/0] gre key plain 1
[AR1-Tunnel0/0/0] source Cellular0/0/0
[AR1-Tunnel0/0/0] destination vpn-instance wan1 10.172.10.2
[AR1-Tunnel0/0/0] ospf enable 1 area 0.0.0.0
[AR1-Tunnel0/0/0] mtu 1424
```

```
[AR1-Tunnel0/0/0] quit
[AR1] interface Tunnel0/0/1
[AR1-Tunnel0/0/1] description key2
[AR1-Tunnel0/0/1] ip address 172.16.2.1 255.255.255.0
[AR1-Tunnel0/0/1] tunnel-protocol gre
[AR1-Tunnel0/0/1] keepalive period 1
[AR1-Tunnel0/0/1] gre key plain 2
[AR1-Tunnel0/0/1] source GigabitEthernet0/0/9
[AR1-Tunnel0/0/1] destination vpn-instance wan2 10.172.10.2
[AR1-Tunnel0/0/1] ospf enable 1 area 0.0.0.0
[AR1-Tunnel0/0/1] mtu 1424
[AR1-Tunnel0/0/1] quit
```

配置AR2。

```
[AR2] interface Tunnel0/0/0
[AR2-Tunnel0/0/0] description key1
[AR2-Tunnel0/0/0] ip address 172.16.1.2 255.255.255.0
[AR2-Tunnel0/0/0] tunnel-protocol gre
[AR2-Tunnel0/0/0] keepalive period 1
[AR2-Tunnel0/0/0] gre key plain 1
[AR2-Tunnel0/0/0] source XGigabitEthernet0/0/0
[AR2-Tunnel0/0/0] destination 192.168.10.1
[AR2-Tunnel0/0/0] ospf enable 1 area 0.0.0.0
[AR2-Tunnel0/0/0] mtu 1424
[AR2-Tunnel0/0/0] quit
[AR2] interface Tunnel0/0/1
[AR2-Tunnel0/0/1] description key2
[AR2-Tunnel0/0/1] ip address 172.16.2.2 255.255.255.0
[AR2-Tunnel0/0/1] tunnel-protocol gre
[AR2-Tunnel0/0/1] gre key plain 2
[AR2-Tunnel0/0/1] source XGigabitEthernet0/0/0
[AR2-Tunnel0/0/1] destination 192.168.20.1
[AR2-Tunnel0/0/1] mtu 1424
[AR2-Tunnel0/0/1] ospf enable 1 area 0.0.0.0
[AR2-Tunnel0/0/1] quit
```

配置完成后Tunnel接口状态变为Up，Tunnel接口之间可以Ping通，直连隧道建立。以AR1的显示为例。

```
<AR1> ping 172.16.1.2
  PING 172.16.1.2: 56  data bytes, press CTRL_C to break
    Reply from 172.16.1.2: bytes=56 Sequence=1 ttl=255 time=1 ms
    Reply from 172.16.1.2: bytes=56 Sequence=2 ttl=255 time=1 ms
    Reply from 172.16.1.2: bytes=56 Sequence=3 ttl=255 time=1 ms
    Reply from 172.16.1.2: bytes=56 Sequence=4 ttl=255 time=1 ms
    Reply from 172.16.1.2: bytes=56 Sequence=5 ttl=255 time=1 ms
  --- 172.16.1.2 ping statistics ---
    5 packet(s) transmitted
    5 packet(s) received
    0.00% packet loss
    round-trip min/avg/max = 1/1/1 ms
```

3. 配置Overlay业务网络互通。在LAN侧的接口和WAN侧的Tunnel接口上分别绑定二层VE接口，实现以太报文通过GRE隧道进行透传，且配置WAN侧Tunnel源接口为Loopback接口用于实现二层报文多发选收。

   # 配置AR1。

```
[AR1] interface LoopBack0
[AR1-LoopBack0] ip address 1.1.1.1 255.255.255.0
[AR1-LoopBack0] quit
[AR1] vlan batch 200
[AR1] interface Virtual-Ethernet0/0/0
[AR1-Virtual-Ethernet0/0/0] portswitch
[AR1-Virtual-Ethernet0/0/0] port link-type access
[AR1-Virtual-Ethernet0/0/0] port default vlan 200
[AR1-Virtual-Ethernet0/0/0] quit
[AR1] interface Virtual-Ethernet0/0/1
[AR1-Virtual-Ethernet0/0/1] portswitch
[AR1-Virtual-Ethernet0/0/1] port link-type trunk
[AR1-Virtual-Ethernet0/0/1] undo port trunk allow-pass vlan 1
```

```
[AR1-Virtual-Ethernet0/0/1] port trunk allow-pass vlan 200
[AR1-Virtual-Ethernet0/0/1] quit
[AR1] interface gigabitethernet 0/0/1
[AR1-GigabitEthernet0/0/1] undo portswitch
[AR1-GigabitEthernet0/0/1] tcp adjust-mss 1200
[AR1-GigabitEthernet0/0/1] map interface Virtual-Ethernet0/0/0
[AR1-GigabitEthernet0/0/1] quit
[AR1] interface Tunnel0/0/2
[AR1-Tunnel0/0/2] ip address 172.16.3.1 255.255.255.0
[AR1-Tunnel0/0/2] tunnel-protocol gre
[AR1-Tunnel0/0/2] gre key plain 3
[AR1-Tunnel0/0/2] source LoopBack0
[AR1-Tunnel0/0/2] destination 2.2.2.2
[AR1-Tunnel0/0/2] map interface Virtual-Ethernet0/0/1
[AR1-Tunnel0/0/2] quit
```

配置AR2。

```
[AR2] interface LoopBack0
[AR2-LoopBack0] ip address 2.2.2.2 255.255.255.0
[AR2-LoopBack0] quit
[AR2] vlan batch 200
[AR2] interface XGigabitEthernet0/0/1
[AR2-XGigabitEthernet0/0/1] portswitch
[AR2-XGigabitEthernet0/0/1] port link-type trunk
[AR2-XGigabitEthernet0/0/1] undo port trunk allow-pass vlan 1
[AR2-XGigabitEthernet0/0/1] port trunk allow-pass vlan 200
[AR2-XGigabitEthernet0/0/1] quit
[AR2] interface Virtual-Ethernet0/0/0
[AR2-Virtual-Ethernet0/0/0] portswitch
[AR2-Virtual-Ethernet0/0/0] port link-type trunk
[AR2-Virtual-Ethernet0/0/0] undo port trunk allow-pass vlan 1
[AR2-Virtual-Ethernet0/0/0] port trunk allow-pass vlan 200
[AR2-Virtual-Ethernet0/0/0] quit
[AR2] interface Virtual-Ethernet0/0/1
[AR2-Virtual-Ethernet0/0/1] portswitch
[AR2-Virtual-Ethernet0/0/1] port link-type trunk
[AR2-Virtual-Ethernet0/0/1] undo port trunk allow-pass vlan 1
[AR2-Virtual-Ethernet0/0/1] port trunk allow-pass vlan 200
[AR2-Virtual-Ethernet0/0/1] quit
[AR2] interface Tunnel0/0/2
[AR2-Tunnel0/0/2] ip address 172.16.3.2 255.255.255.0
[AR2-Tunnel0/0/2] tunnel-protocol gre
[AR2-Tunnel0/0/2] gre key plain 3
[AR2-Tunnel0/0/2] source LoopBack0
[AR2-Tunnel0/0/2] destination 1.1.1.1
[AR2-Tunnel0/0/2] map interface Virtual-Ethernet0/0/1
[AR2-Tunnel0/0/2] quit
[AR2] interface Vlanif200
[AR2-Vlanif200] map interface Virtual-Ethernet0/0/0
[AR2-Vlanif200] tcp adjust-mss 1200
[AR2-Vlanif200] quit
```

4. 在源接口为Loopback接口的内层Ethernet Over GRE隧道上配置重定向多发选收功能，并指定链路组不根据链路状态刷新选路信息，避免路由切换过程中出现的丢包现象，最大程度保证业务连续性。

   # 配置AR1。

```
[AR1] replication path-group 1
[AR1-replication-path-group-1] path Tunnel0/0/0 priority 1
[AR1-replication-path-group-1] path Tunnel0/0/1 priority 2
[AR1-replication-path-group-1] quit
[AR1] interface tunnel 0/0/2
[AR1-Tunnel0/0/2] redirect-replication path-group 1
[AR1-Tunnel0/0/2] quit
[AR1] replication if-down-delay 65535
```

   # 配置AR2。

```
[AR2] replication path-group 1
[AR2-replication-path-group-1] path Tunnel 0/0/0 priority 1
[AR2-replication-path-group-1] path Tunnel 0/0/1 priority 2
```

```
[AR2-replication-path-group-1] quit
[AR2] interface tunnel0/0/2
[AR2-Tunnel0/0/2] redirect-replication path-group 1
[AR2-Tunnel0/0/2] quit
[AR2] replication if-down-delay 65535
```

5. 配置OSPF路由。

   # 配置AR1。

```
[AR1] ospf 1
[AR1-ospf-1] area 0.0.0.0
[AR1-ospf-1-area-0.0.0.0] network 1.1.1.1 0.0.0.0
[AR1-ospf-1-area-0.0.0.0] quit
[AR1-ospf-1] quit
```

   # 配置AR2。

```
[AR2] ospf 1
[AR2-ospf-1] area 0.0.0.0
[AR2-ospf-1-area-0.0.0.0] network 2.2.2.2 0.0.0.0
[AR2-ospf-1-area-0.0.0.0] quit
[AR2-ospf-1] quit
```

配置文件

- AR1的配置文件

```
#
sysname AR1
#
router id 1.1.1.1
#
vlan batch 200
#
 replication if-down-delay 65535
#
ip vpn-instance wan1
 ipv4-family
  route-distinguisher 192.168.10.1:0
#
ip vpn-instance wan2
 ipv4-family
  route-distinguisher 192.168.20.1:0
#
interface GigabitEthernet0/0/1
 undo portswitch
 tcp adjust-mss 1200
 map interface Virtual-Ethernet0/0/0
#
interface GigabitEthernet0/0/9
 ip binding vpn-instance wan2
 ip address 192.168.20.1 255.255.255.0
#
interface Cellular0/0/0
 ip binding vpn-instance wan1
 dialer enable-circular
 dialer timer autodial 10
 modem auto-recovery dial action modem-reboot fail-times
128
 modem auto-recovery services-unavailable action modem-reboot test-times 0 interval
3600
 ip address negotiate
#
interface Virtual-Ethernet0/0/0
 portswitch
 port link-type access
 port default vlan 200
#
interface Virtual-Ethernet0/0/1
 portswitch
 port link-type trunk
```

```
 undo port trunk allow-pass vlan 1
 port trunk allow-pass vlan 200
#
interface LoopBack0
 ip address 1.1.1.1 255.255.255.0
#
interface Tunnel0/0/0
 description key1
 ip address 172.16.1.1 255.255.255.0
 tunnel-protocol gre
 keepalive period 1
 gre key plain 1
 source Cellular0/0/0
 destination vpn-instance wan1 10.172.10.2
 ospf enable 1 area 0.0.0.0
 mtu 1424
#
interface Tunnel0/0/1
 description key2
 ip address 172.16.2.1 255.255.255.0
 tunnel-protocol gre
 keepalive period 1
 gre key plain 2
 source GigabitEthernet0/0/9
 destination vpn-instance wan2 10.172.10.2
 ospf enable 1 area 0.0.0.0
 mtu 1424
#
interface Tunnel0/0/2
 ip address 172.16.3.1 255.255.255.0
 tunnel-protocol gre
 gre key plain 3
 source LoopBack0
 destination 2.2.2.2
 redirect-replication path-group 1
 map interface Virtual-Ethernet0/0/1
#
ospf 1
 area 0.0.0.0
  network 1.1.1.1 0.0.0.0
#
ip route-static vpn-instance wan1 10.172.0.0 255.255.0.0 Cellular0/0/0
ip route-static vpn-instance wan2 10.172.0.0 255.255.0.0 192.168.20.254
#
replication path-group 1
 path Tunnel0/0/0 priority 1
 path Tunnel0/0/1 priority 2
#
```

- AR2的配置文件

```
#
sysname AR2
#
router id 2.2.2.2
#
vlan batch  200
#
 replication if-down-delay 65535
#
interface Vlanif200
 map interface Virtual-Ethernet0/0/0
 tcp adjust-mss 1200
#
interface XGigabitEthernet0/0/0
 ip address 10.172.10.2 255.255.255.0
#
interface XGigabitEthernet0/0/1
 portswitch
 port link-type trunk
 undo port trunk allow-pass vlan 1
```

```
 port trunk allow-pass vlan 200
 #
interface Virtual-Ethernet0/0/0
 portswitch
 port link-type trunk
 undo port trunk allow-pass vlan 1
 port trunk allow-pass vlan 200
#
interface Virtual-Ethernet0/0/1
 portswitch
 port link-type trunk
 undo port trunk allow-pass vlan 1
 port trunk allow-pass vlan 200
#
interface LoopBack0
 ip address 2.2.2.2 255.255.255.255
#
interface Tunnel0/0/0
 description key1
 ip address 172.16.1.2 255.255.255.0
 tunnel-protocol gre
 keepalive period 1
 gre key plain 1
 source XGigabitEthernet0/0/0
 destination 192.168.10.1
 ospf enable 1 area 0.0.0.0
 mtu 1424
#
interface Tunnel0/0/1
 description key2
 ip address 172.16.2.2 255.255.255.0
 tunnel-protocol gre
 keepalive period 1
 gre key plain 2
 source XGigabitEthernet0/0/0
 destination 192.168.20.1
 ospf enable 1 area 0.0.0.0
 mtu 1424
#
interface Tunnel0/0/2
 ip address 172.16.3.2 255.255.255.0
 tunnel-protocol gre
 gre key plain 3
 source LoopBack0
 destination 1.1.1.1
 redirect-replication path-group 1
 map interface Virtual-Ethernet0/0/1
#
ospf 1
 area 0.0.0.0
  network 2.2.2.2 0.0.0.0
#
ip route-static 192.168.0.0 255.255.0.0 10.172.10.1
#
replication path-group 1
 path Tunnel0/0/0 priority 1
 path Tunnel0/0/1 priority 2
#
```

7.2.10 配置二层多发选收示例（5G CPE 场景）

组网需求

说明

AR设备配置多个GE子接口与5G CPE（N5368X）桥接模式对接时，由于CPE使用场景约束，AR设备需要使用子接口下的MAC地址修改功能保证CPE学习MAC地址的唯一性。

如图7-13所示，RouterA为企业分支网关，RouterC和RouterD为企业总部网关，用户希望实现：

- 正常情况下，RouterD为Master设备承担流量转发，当RouterD故障时，RouterC接替作为网关继续进行工作，实现网关的冗余备份。
- 分支和总部可以传输原始以太报文（如工业控制的PLC报文），采用二层隧道封装。
- 对于可靠性要求很高并且流量较小的业务，如果分支RouterA其中一条链路故障，将报文复制到另外一条链路发送出去，防止出现业务中断的现象。

图 7-13 配置二层多发选收组网图

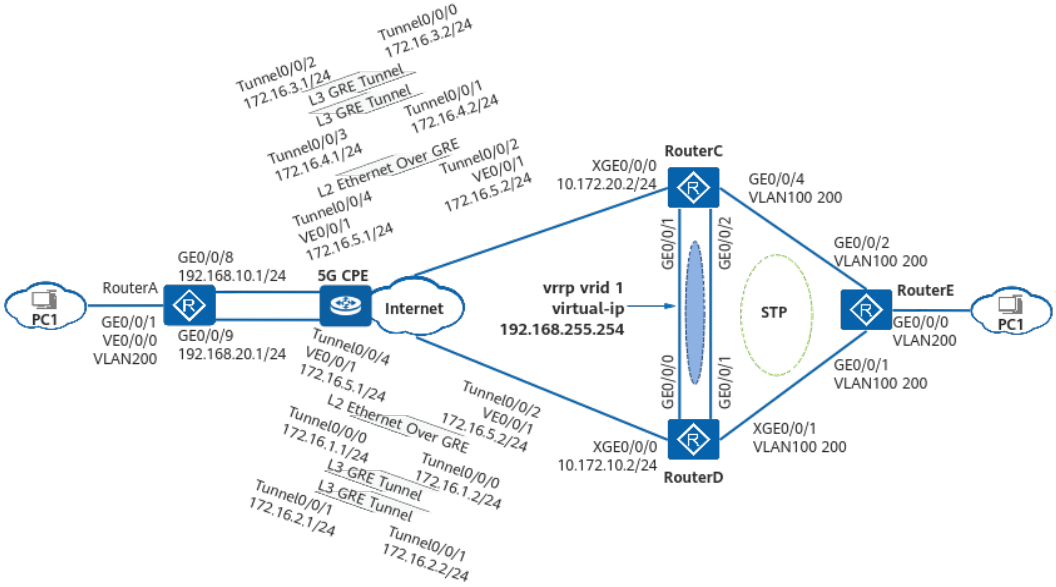

数据准备

表 7-17 数据准备表

项目	数据	说明
分支RouterA LAN侧接口信息	LAN侧物理接口：GE0/0/1 绑定的VE接口：VE0/0/0 所属VLAN：200	分支RouterA与分支用户之间的链路信息。
分支RouterA WAN侧接口信息	主链路物理接口：GE0/0/8 IP地址：192.168.10.1/24 绑定VPN实例：wan1 复制链路物理接口：GE0/0/9 IP地址：192.168.20.1/24 绑定VPN实例：wan2	分支RouterA与5G CPE之间的链路信息。

项目	数据	说明
分支RouterA Tunnel0/0/0接口信息	IP地址：172.16.1.1/24 源接口：GE0/0/8	分支RouterA和总部RouterD之间的L3 GRE隧道信息。
分支RouterA Tunnel0/0/1接口信息	IP地址：172.16.2.1/24 源接口：GE0/0/9	分支RouterA和总部RouterD之间的L3 GRE隧道信息。
分支RouterA Tunnel0/0/2接口信息	IP地址：172.16.3.1/24 源接口：GE0/0/8	分支RouterA和总部RouterC之间的L3 GRE隧道信息。
分支RouterA Tunnel0/0/3接口信息	IP地址：172.16.4.1/24 源接口：GE0/0/9	分支RouterA和总部RouterC之间的L3 GRE隧道信息。
分支RouterA Tunnel0/0/4接口信息	IP地址：172.16.5.1/24 源接口：LoopBack0 绑定的VE接口：VE0/0/1	分支RouterA和总部RouterC以及RouterD之间的Ethernet over GRE隧道信息。
总部RouterC LAN侧接口信息	LAN侧物理接口：GE0/0/4 所属VLAN：100、200	总部RouterC与分支RouterE之间的链路信息。
总部RouterC WAN侧接口信息	WAN侧物理接口：XGE0/0/0 IP地址：10.172.20.2/24	总部RouterC与Internet之间的链路信息。
总部RouterC Tunnel0/0/0接口信息	IP地址：172.16.3.2/24 源接口：XGE0/0/0	总部RouterC和分支RouterA之间的L3 GRE隧道信息。
总部RouterC Tunnel0/0/1接口信息	IP地址：172.16.4.2/24 源接口：XGE0/0/0	总部RouterC和分支RouterA之间的L3 GRE隧道信息。
总部RouterC Tunnel0/0/2接口信息	IP地址：172.16.5.2/24 源地址：192.168.255.254（VRRP备份组的虚拟IP地址） 绑定的VE接口：VE0/0/1	总部RouterC和分支RouterA之间的Ethernet over GRE隧道信息。
总部RouterD LAN侧接口信息	LAN侧物理接口：XGE0/0/1 所属VLAN：100、200	总部RouterD与分支RouterE之间的链路信息。
总部RouterD WAN侧接口信息	WAN侧物理接口：XGE0/0/0 IP地址：10.172.10.2/24	总部RouterD与Internet之间的链路信息。
总部RouterD Tunnel0/0/0接口信息	IP地址：172.16.1.2/24 源接口：XGE0/0/0	总部RouterD和分支RouterA之间的L3 GRE隧道信息。
总部RouterD Tunnel0/0/1接口信息	IP地址：172.16.2.2/24 源接口：XGE0/0/0	总部RouterD和分支RouterA之间的L3 GRE隧道信息。

项目	数据	说明
总部RouterD Tunnel0/0/2接口信息	IP地址：172.16.5.2/24 源地址：192.168.255.254（VRRP备份组的虚拟IP地址） 绑定的VE接口：VE0/0/1	总部RouterD和分支RouterA之间的Ethernet over GRE隧道信息。
分支RouterE LAN侧接口信息	LAN侧物理接口1：GE0/0/0 所属VLAN：200 LAN侧物理接口2：GE0/0/1 所属VLAN：100、200 LAN侧物理接口3：GE0/0/2 所属VLAN：100、200	GE0/0/0为分支RouterE与分支用户之间的接口。 GE0/0/1为分支RouterE与总部RouterD之间的接口。 GE0/0/2为分支RouterE与总部RouterC之间的接口。

配置思路

本例配置的主要思路是：

1. 配置设备物理接口的IP地址及静态路由，实现设备之间三层网络互通，同时，在RouterA上创建不同的VPN实例，实现不同VPN间的业务隔离。
2. 在RouterA和RouterC、RouterD之间部署GRE隧道，通过静态路由指定到达对端的报文通过GRE隧道转发，实现Underlay传输网络互通，用于三层报文多发选收。
3. 配置Overlay业务网络互通。
   - 在LAN侧的接口和WAN侧的Tunnel接口上分别绑定二层VE接口，实现以太报文通过GRE隧道进行透传，且配置WAN侧Tunnel接口的源接口为Loopback接口用于实现二层报文多发选收。
   - RouterC和RouterD配置RSTP功能，破除二层网络中的环路。
   - RouterC和RouterD配置Eth-Trunk保证连接的可靠性。
4. 在RouterC和RouterD上配置VRRP备份组。其中，RouterD上配置较高优先级，作为Master设备承担流量转发；RouterC作为备用路由器，实现网关冗余备份。
5. 在RouterA、RouterC和RouterD上分别配置BFD会话，实现设备间链路故障的快速检测。
6. 在Tunnel接口上配置多发选收。
7. 配置静态路由，并联动BFD会话。

操作步骤

1. 配置设备物理接口的IP地址及静态路由，实现设备之间三层网络互通。

   # 配置RouterA物理接口的IP地址及静态路由，在RouterA上创建不同的VPN实例，实现不同VPN间的业务隔离。

```
<Huawei> system-view
[Huawei] sysname RouterA
```

```
[RouterA] ip vpn-instance wan1
[RouterA-vpn-instance-wan1] ipv4-family
[RouterA-vpn-instance-wan1-af-ipv4] route-distinguisher 192.168.10.1:0
[RouterA-vpn-instance-wan1-af-ipv4] quit
[RouterA-vpn-instance-wan1] quit
[RouterA] ip vpn-instance wan2
[RouterA-vpn-instance-wan2] ipv4-family
[RouterA-vpn-instance-wan2-af-ipv4] route-distinguisher 192.168.20.1:0
[RouterA-vpn-instance-wan2-af-ipv4] quit
[RouterA-vpn-instance-wan2] quit
[RouterA] interface gigabitethernet 0/0/8
[RouterA-GigabitEthernet0/0/8] ip binding vpn-instance wan1
[RouterA-GigabitEthernet0/0/8] ip address 192.168.10.1 255.255.255.0
[RouterA-GigabitEthernet0/0/8] quit
[RouterA] interface gigabitethernet 0/0/9
[RouterA-GigabitEthernet0/0/9] ip binding vpn-instance wan2
[RouterA-GigabitEthernet0/0/9] ip address 192.168.20.1 255.255.255.0
[RouterA-GigabitEthernet0/0/9] quit
[RouterA] ip route-static vpn-instance wan1 10.172.0.0 255.255.0.0 192.168.10.254
[RouterA] ip route-static vpn-instance wan2 10.172.0.0 255.255.0.0 192.168.20.254
```

配置RouterC物理接口的IP地址及静态路由。

```
<Huawei> system-view
[Huawei] sysname RouterC
[RouterC] interface XGigabitEthernet0/0/0
[RouterC-XGigabitEthernet0/0/0] ip address 10.172.20.2 255.255.255.0
[RouterC-XGigabitEthernet0/0/0] quit
[RouterC] ip route-static 192.168.0.0 255.255.0.0 10.172.20.1
```

配置RouterD物理接口的IP地址及静态路由。

```
<Huawei> system-view
[Huawei] sysname RouterD
[RouterD] interface XGigabitEthernet0/0/0
[RouterD-XGigabitEthernet0/0/0] ip address 10.172.10.2 255.255.255.0
[RouterD-XGigabitEthernet0/0/0] quit
[RouterD] ip route-static 192.168.0.0 255.255.0.0 10.172.10.1
```

2. 在RouterA和RouterC、RouterD之间部署GRE隧道，通过静态路由指定到达对端的报文通过GRE隧道转发，实现Underlay传输网络互通，用于三层报文多发选收。

   # 在RouterA上创建Tunnel接口，并配置接口路由。

```
[RouterA] interface Tunnel0/0/0
[RouterA-Tunnel0/0/0] description key1
[RouterA-Tunnel0/0/0] ip address 172.16.1.1 255.255.255.0
[RouterA-Tunnel0/0/0] tunnel-protocol gre
[RouterA-Tunnel0/0/0] gre key plain 1
[RouterA-Tunnel0/0/0] source GigabitEthernet0/0/8
[RouterA-Tunnel0/0/0] destination vpn-instance wan1 10.172.10.2
[RouterA-Tunnel0/0/0] quit
[RouterA] interface Tunnel0/0/1
[RouterA-Tunnel0/0/1] description key2
[RouterA-Tunnel0/0/1] ip address 172.16.2.1 255.255.255.0
[RouterA-Tunnel0/0/1] tunnel-protocol gre
[RouterA-Tunnel0/0/1] gre key plain 2
[RouterA-Tunnel0/0/1] source GigabitEthernet0/0/9
[RouterA-Tunnel0/0/1] destination vpn-instance wan2 10.172.10.2
[RouterA-Tunnel0/0/1] quit
[RouterA] interface Tunnel0/0/2
[RouterA-Tunnel0/0/2] ip address 172.16.3.1 255.255.255.0
[RouterA-Tunnel0/0/2] tunnel-protocol gre
[RouterA-Tunnel0/0/2] gre key plain 3
[RouterA-Tunnel0/0/2] source GigabitEthernet0/0/8
[RouterA-Tunnel0/0/2] destination vpn-instance wan1 10.172.20.2
[RouterA-Tunnel0/0/2] quit
[RouterA] interface Tunnel0/0/3
[RouterA-Tunnel0/0/3] ip address 172.16.4.1 255.255.255.0
[RouterA-Tunnel0/0/3] tunnel-protocol gre
[RouterA-Tunnel0/0/3] gre key plain 4
[RouterA-Tunnel0/0/3] source GigabitEthernet0/0/9
```

```
[RouterA-Tunnel0/0/3] destination vpn-instance wan2 10.172.20.2
[RouterA-Tunnel0/0/3] quit
```

在RouterC上创建Tunnel接口，并配置接口路由。

```
[RouterC] interface Tunnel0/0/0
[RouterC-Tunnel0/0/0] ip address 172.16.3.2 255.255.255.0
[RouterC-Tunnel0/0/0] tunnel-protocol gre
[RouterC-Tunnel0/0/0] gre key plain 3
[RouterC-Tunnel0/0/0] source XGigabitEthernet0/0/0
[RouterC-Tunnel0/0/0] destination 192.168.10.1
[RouterC-Tunnel0/0/0] quit
[RouterC] interface Tunnel0/0/1
[RouterC-Tunnel0/0/1] ip address 172.16.4.2 255.255.255.0
[RouterC-Tunnel0/0/1] tunnel-protocol gre
[RouterC-Tunnel0/0/1] gre key plain 4
[RouterC-Tunnel0/0/1] source XGigabitEthernet0/0/0
[RouterC-Tunnel0/0/1] destination 192.168.20.1
[RouterC-Tunnel0/0/1] quit
```

在RouterD上创建Tunnel接口，并配置接口路由。

```
[RouterD] interface Tunnel0/0/0
[RouterD-Tunnel0/0/0] description key1
[RouterD-Tunnel0/0/0] ip address 172.16.1.2 255.255.255.0
[RouterD-Tunnel0/0/0] tunnel-protocol gre
[RouterD-Tunnel0/0/0] gre key plain 1
[RouterD-Tunnel0/0/0] source XGigabitEthernet0/0/0
[RouterD-Tunnel0/0/0] destination 192.168.10.1
[RouterD-Tunnel0/0/0] quit
[RouterD] interface Tunnel0/0/1
[RouterD-Tunnel0/0/1] description key2
[RouterD-Tunnel0/0/1] ip address 172.16.2.2 255.255.255.0
[RouterD-Tunnel0/0/1] tunnel-protocol gre
[RouterD-Tunnel0/0/1] gre key plain 2
[RouterD-Tunnel0/0/1] source XGigabitEthernet0/0/0
[RouterD-Tunnel0/0/1] destination 192.168.20.1
[RouterD-Tunnel0/0/1] quit
```

配置完成后Tunnel接口状态变为Up，Tunnel接口之间可以Ping通，直连隧道建立。以RouterA的显示为例。

```
<RouterA> ping 172.16.1.2
  PING 172.16.1.2: 56  data bytes, press CTRL_C to break
    Reply from 172.16.1.2: bytes=56 Sequence=1 ttl=255 time=1 ms
    Reply from 172.16.1.2: bytes=56 Sequence=2 ttl=255 time=1 ms
    Reply from 172.16.1.2: bytes=56 Sequence=3 ttl=255 time=1 ms
    Reply from 172.16.1.2: bytes=56 Sequence=4 ttl=255 time=1 ms
    Reply from 172.16.1.2: bytes=56 Sequence=5 ttl=255 time=1 ms
  --- 172.16.1.2 ping statistics ---
    5 packet(s) transmitted
    5 packet(s) received
    0.00% packet loss
    round-trip min/avg/max = 1/1/1 ms
```

3. 配置Overlay业务网络互通。在LAN侧的接口和WAN侧的Tunnel接口上分别绑定二层VE接口，实现以太报文通过GRE隧道进行透传，且配置WAN侧Tunnel接口的源接口为Loopback接口用于实现二层报文多发选收。

   # 配置RouterA。

```
[RouterA] interface LoopBack0
[RouterA-LoopBack0] ip address 1.1.1.1 255.255.255.0
[RouterA-LoopBack0] quit
[RouterA] vlan batch 100 200
[RouterA] interface Virtual-Ethernet0/0/0
[RouterA-Virtual-Ethernet0/0/0] portswitch
[RouterA-Virtual-Ethernet0/0/0] port link-type access
[RouterA-Virtual-Ethernet0/0/0] port default vlan 200
[RouterA-Virtual-Ethernet0/0/0] quit
[RouterA] interface Virtual-Ethernet0/0/1
[RouterA-Virtual-Ethernet0/0/1] portswitch
[RouterA-Virtual-Ethernet0/0/1] port link-type trunk
```

```
[RouterA-Virtual-Ethernet0/0/1] undo port trunk allow-pass vlan 1
[RouterA-Virtual-Ethernet0/0/1] port trunk allow-pass vlan 200
[RouterA-Virtual-Ethernet0/0/1] quit
[RouterA] interface gigabitethernet 0/0/1
[RouterA-GigabitEthernet0/0/1] undo portswitch
[RouterA-GigabitEthernet0/0/1] tcp adjust-mss 1200
[RouterA-GigabitEthernet0/0/1] map interface Virtual-Ethernet0/0/0
[RouterA-GigabitEthernet0/0/1] quit
[RouterA] interface Tunnel0/0/4
[RouterA-Tunnel0/0/4] ip address 172.16.5.1 255.255.255.0
[RouterA-Tunnel0/0/4] tunnel-protocol gre
[RouterA-Tunnel0/0/4] gre key plain 5
[RouterA-Tunnel0/0/4] source LoopBack0
[RouterA-Tunnel0/0/4] destination 192.168.255.254
[RouterA-Tunnel0/0/4] map interface Virtual-Ethernet0/0/1
[RouterA-Tunnel0/0/4] quit
```

配置RouterC。

- 配置RSTP功能，破除二层网络中的环路。
- 配置Eth-Trunk保证连接的可靠性。

```
[RouterC] vlan batch 100 200
[RouterC] interface Eth-Trunk0
[RouterC-Eth-Trunk0] port link-type trunk
[RouterC-Eth-Trunk0] undo port trunk allow-pass vlan 1
[RouterC-Eth-Trunk0] port trunk allow-pass vlan 100 200
[RouterC-Eth-Trunk0] quit
[RouterC] interface gigabitethernet0/0/1
[RouterC-GigabitEthernet0/0/1] portswitch
[RouterC-GigabitEthernet0/0/1] eth-trunk 0
[RouterC-GigabitEthernet0/0/1] quit
[RouterC] interface gigabitethernet0/0/2
[RouterC-GigabitEthernet0/0/2] portswitch
[RouterC-GigabitEthernet0/0/2] eth-trunk 0
[RouterC-GigabitEthernet0/0/2] quit
[RouterC] interface gigabitethernet0/0/4
[RouterC-GigabitEthernet0/0/4] portswitch
[RouterC-GigabitEthernet0/0/4] port link-type trunk
[RouterC-GigabitEthernet0/0/4] port trunk allow-pass vlan 100 200
[RouterC-GigabitEthernet0/0/4] quit
[RouterC] interface Virtual-Ethernet0/0/0
[RouterC-Virtual-Ethernet0/0/0] portswitch
[RouterC-Virtual-Ethernet0/0/0] port link-type trunk
[RouterC-Virtual-Ethernet0/0/0] undo port trunk allow-pass vlan 1
[RouterC-Virtual-Ethernet0/0/0] port trunk allow-pass vlan 200
[RouterC-Virtual-Ethernet0/0/0] quit
[RouterC] interface Virtual-Ethernet0/0/1
[RouterC-Virtual-Ethernet0/0/1] portswitch
[RouterC-Virtual-Ethernet0/0/1] port link-type trunk
[RouterC-Virtual-Ethernet0/0/1] undo port trunk allow-pass vlan 1
[RouterC-Virtual-Ethernet0/0/1] port trunk allow-pass vlan 200
[RouterC-Virtual-Ethernet0/0/1] quit
[RouterC] interface Vlanif200
[RouterC-Vlanif200] map interface Virtual-Ethernet0/0/0
[RouterC-Vlanif200] quit
[RouterC] interface Tunnel0/0/2
[RouterC-Tunnel0/0/2] ip address 172.16.5.2 255.255.255.0
[RouterC-Tunnel0/0/2] tunnel-protocol gre
[RouterC-Tunnel0/0/2] gre key plain 5
[RouterC-Tunnel0/0/2] source 192.168.255.254
[RouterC-Tunnel0/0/2] destination 1.1.1.1
[RouterC-Tunnel0/0/2] map interface Virtual-Ethernet0/0/1
[RouterC-Tunnel0/0/2] quit
```

配置RouterD。

- 配置RSTP功能，破除二层网络中的环路。
- 配置Eth-Trunk保证连接的可靠性。

```
[RouterD] stp instance 0 root primary
[RouterD] vlan batch 100 200
[RouterD] interface Eth-Trunk0
[RouterD-Eth-Trunk0] port link-type trunk
[RouterD-Eth-Trunk0] undo port trunk allow-pass vlan 1
[RouterD-Eth-Trunk0] port trunk allow-pass vlan 100 200
[RouterD-Eth-Trunk0] quit
[RouterD] interface gigabitethernet0/0/0
[RouterD-GigabitEthernet0/0/0] portswitch
[RouterD-GigabitEthernet0/0/0] eth-trunk 0
[RouterD-GigabitEthernet0/0/0] quit
[RouterD] interface gigabitethernet0/0/1
[RouterD-GigabitEthernet0/0/1] portswitch
[RouterD-GigabitEthernet0/0/1] eth-trunk 0
[RouterD-GigabitEthernet0/0/1] quit
[RouterD] interface XGigabitEthernet0/0/1
[RouterD-XGigabitEthernet0/0/1] portswitch
[RouterD-XGigabitEthernet0/0/1] port link-type trunk
[RouterD-XGigabitEthernet0/0/1] undo port trunk allow-pass vlan 1
[RouterD-XGigabitEthernet0/0/1] port trunk allow-pass vlan 100 200
[RouterD-XGigabitEthernet0/0/1] quit
[RouterD] interface Virtual-Ethernet0/0/0
[RouterD-Virtual-Ethernet0/0/0] portswitch
[RouterD-Virtual-Ethernet0/0/0] port link-type trunk
[RouterD-Virtual-Ethernet0/0/0] undo port trunk allow-pass vlan 1
[RouterD-Virtual-Ethernet0/0/0] port trunk allow-pass vlan 200
[RouterD-Virtual-Ethernet0/0/0] quit
[RouterD] interface Virtual-Ethernet0/0/1
[RouterD-Virtual-Ethernet0/0/1] portswitch
[RouterD-Virtual-Ethernet0/0/1] port link-type trunk
[RouterD-Virtual-Ethernet0/0/1] undo port trunk allow-pass vlan 1
[RouterD-Virtual-Ethernet0/0/1] port trunk allow-pass vlan 200
[RouterD-Virtual-Ethernet0/0/1] quit
[RouterD] interface Vlanif200
[RouterD-Vlanif200] map interface Virtual-Ethernet0/0/0
[RouterD-Vlanif200] quit
[RouterD] interface Tunnel0/0/2
[RouterD-Tunnel0/0/2] ip address 172.16.5.2 255.255.255.0
[RouterD-Tunnel0/0/2] tunnel-protocol gre
[RouterD-Tunnel0/0/2] gre key plain 5
[RouterD-Tunnel0/0/2] source 192.168.255.254
[RouterD-Tunnel0/0/2] destination 1.1.1.1
[RouterD-Tunnel0/0/2] map interface Virtual-Ethernet0/0/1
[RouterD-Tunnel0/0/2] quit
```

配置RouterE的接口加入VLAN。

```
<Huawei> system-view
[Huawei] sysname RouterE
[RouterE] interface gigabitethernet 0/0/0
[RouterE-GigabitEthernet0/0/0] stp disable
[RouterE-GigabitEthernet0/0/0] port link-type trunk
[RouterE-GigabitEthernet0/0/0] undo port trunk allow-pass vlan 1
[RouterE-GigabitEthernet0/0/0] port trunk allow-pass vlan 200
[RouterE-GigabitEthernet0/0/0] quit
[RouterE] interface gigabitethernet 0/0/1
[RouterE-GigabitEthernet0/0/1] port link-type trunk
[RouterE-GigabitEthernet0/0/1] undo port trunk allow-pass vlan 1
[RouterE-GigabitEthernet0/0/1] port trunk allow-pass vlan 100 200
[RouterE-GigabitEthernet0/0/1] quit
[RouterE] interface gigabitethernet 0/0/2
[RouterE-GigabitEthernet0/0/2] port link-type trunk
[RouterE-GigabitEthernet0/0/2] undo port trunk allow-pass vlan 1
[RouterE-GigabitEthernet0/0/2] port trunk allow-pass vlan 100 200
[RouterE-GigabitEthernet0/0/2] quit
```

4. 配置VRRP主备备份。RouterD上配置较高优先级，作为Master设备承担流量转发；RouterC作为备用路由器，实现网关冗余备份。

   # 配置RouterC。

```
[RouterC] interface Vlanif100
[RouterC-Vlanif100] ip address 192.168.255.2 255.255.255.0
[RouterC-Vlanif100] vrrp vrid 1 virtual-ip 192.168.255.254
[RouterC-Vlanif100] quit
```

配置RouterD。

```
[RouterD] interface Vlanif100
[RouterD-Vlanif100] ip address 192.168.255.1 255.255.255.0
[RouterD-Vlanif100] vrrp vrid 1 virtual-ip 192.168.255.254
[RouterD-Vlanif100] vrrp vrid 1 priority 120
[RouterD-Vlanif100] vrrp vrid 1 track interface GigabitEthernet0/0/0 reduced 40
[RouterD-Vlanif100] quit
```

5. 配置BFD会话，实现设备间链路故障的快速检测。

配置RouterA。

```
[RouterA] bfd
[RouterA-bfd] quit
[RouterA] bfd 1 bind peer-ip 172.16.1.2 source-ip 172.16.1.1
[RouterA-bfd-session-1] discriminator local 1
[RouterA-bfd-session-1] discriminator remote 2
[RouterA-bfd-session-1] commit
[RouterA-bfd-session-1] quit
[RouterA] bfd 2 bind peer-ip 172.16.2.2 source-ip 172.16.2.1
[RouterA-bfd-session-2] discriminator local 3
[RouterA-bfd-session-2] discriminator remote 4
[RouterA-bfd-session-2] commit
[RouterA-bfd-session-2] quit
[RouterA] bfd 3 bind peer-ip 172.16.3.2 source-ip 172.16.3.1
[RouterA-bfd-session-3] discriminator local 5
[RouterA-bfd-session-3] discriminator remote 6
[RouterA-bfd-session-3] commit
[RouterA-bfd-session-3] quit
[RouterA] bfd 4 bind peer-ip 172.16.4.2 source-ip 172.16.4.1
[RouterA-bfd-session-4] discriminator local 7
[RouterA-bfd-session-4] discriminator remote 8
[RouterA-bfd-session-4] commit
[RouterA-bfd-session-4] quit
```

配置RouterC。

```
[RouterC] bfd
[RouterC-bfd] quit
[RouterC] bfd 1 bind peer-ip 172.16.3.1 source-ip 172.16.3.2
[RouterC-bfd-session-1] discriminator local 6
[RouterC-bfd-session-1] discriminator remote 5
[RouterC-bfd-session-1] commit
[RouterC-bfd-session-1] quit
[RouterC] bfd 2 bind peer-ip 172.16.4.1 source-ip 172.16.4.2
[RouterC-bfd-session-2] discriminator local 8
[RouterC-bfd-session-2] discriminator remote 7
[RouterC-bfd-session-2] commit
[RouterC-bfd-session-2] quit
```

配置RouterD。

```
[RouterD] bfd
[RouterD-bfd] quit
[RouterD] bfd 1 bind peer-ip 172.16.1.1 source-ip 172.16.1.2
[RouterD-bfd-session-1] discriminator local 2
[RouterD-bfd-session-1] discriminator remote 1
[RouterD-bfd-session-1] commit
[RouterD-bfd-session-1] quit
[RouterD] bfd 2 bind peer-ip 172.16.2.1 source-ip 172.16.2.2
[RouterD-bfd-session-2] discriminator local 4
[RouterD-bfd-session-2] discriminator remote 3
[RouterD-bfd-session-2] commit
[RouterD-bfd-session-2] quit
```

配置完成后，执行**display bfd session all**命令，可以看到建立了BFD会话，且状态为Up。以RouterA上的显示为例。

```
<RouterA> display bfd session all
--------------------------------------------------------------------------------
Local Remote     PeerIpAddr       State     Type         InterfaceName
--------------------------------------------------------------------------------
1     2          172.16.1.2       Up        S_IP_PEER         -
3     4          172.16.2.2       Up        S_IP_PEER         -
5     6          172.16.3.2       Up        S_IP_PEER         -
7     8          172.16.4.2       Up        S_IP_PEER         -
--------------------------------------------------------------------------------
    Total UP/DOWN Session Number : 4/0
```

6. 在Tunnel接口上配置多发选收。

   # 配置RouterA。

```
[RouterA] replication path-group 1
[RouterA-replication-path-group-1] path Tunnel 0/0/1 priority 1
[RouterA-replication-path-group-1] quit
[RouterA] replication path-group 2
[RouterA-replication-path-group-2] path Tunnel 0/0/3 priority 1
[RouterA-replication-path-group-2] quit
[RouterA] interface tunnel 0/0/0
[RouterA-Tunnel0/0/0] replication path-group 1
[RouterA-Tunnel0/0/0] quit
[RouterA] interface tunnel0/0/2
[RouterA-Tunnel0/0/2] replication path-group 2
[RouterA-Tunnel0/0/2] quit
```

   # 配置RouterC。

```
[RouterC] replication path-group 1
[RouterC-replication-path-group-1] path Tunnel 0/0/1 priority 1
[RouterC-replication-path-group-1] quit
[RouterC] interface tunnel0/0/0
[RouterC-Tunnel0/0/0] replication path-group 1
[RouterC-Tunnel0/0/0] quit
```

   # 配置RouterD。

```
[RouterD] replication path-group 1
[RouterD-replication-path-group-1] path Tunnel 0/0/1 priority 1
[RouterD-replication-path-group-1] quit
[RouterD] interface tunnel0/0/0
[RouterD-Tunnel0/0/0] replication path-group 1
[RouterD-Tunnel0/0/0] quit
```

   # 配置完成后，执行**display replication path-group**命令可以看到链路组的所有链路状态和选路结果。以RouterA的显示为例。

```
[RouterA] display replication path-group 1
-------------------------------------------------------------
Path member        Priority      Track info      Path state
Tunnel0/0/1         1              -               UP
-------------------------------------------------------------
[RouterA] display replication path-group
--------------------------------------------------------------------------------
Group name                        Replication link1     Replication link2
1                              Tunnel0/0/1           -
--------------------------------------------------------------------------------
```

7. 配置静态路由，并联动BFD会话。

   # 配置RouterA。

```
[RouterA] ip route-static 192.168.255.254 255.255.255.255 Tunnel0/0/0 track bfd-session 1
[RouterA] ip route-static 192.168.255.254 255.255.255.255 Tunnel0/0/1 preference 70 track bfd-
session 2
[RouterA] ip route-static 192.168.255.254 255.255.255.255 Tunnel0/0/2 preference 80 track bfd-
session 3
[RouterA] ip route-static 192.168.255.254 255.255.255.255 Tunnel0/0/3 preference 90 track bfd-
session 4
```

   # 配置RouterC。

```
[RouterC] ip route-static 1.1.1.1 255.255.255.255 Tunnel0/0/0 track bfd-session 1
[RouterC] ip route-static 1.1.1.1 255.255.255.255 Tunnel0/0/1 preference 70 track bfd-session 2
```

配置RouterD。

```
[RouterD] ip route-static 1.1.1.1 255.255.255.255 Tunnel0/0/0 track bfd-session 1
[RouterD] ip route-static 1.1.1.1 255.255.255.255 Tunnel0/0/1 preference 70 track bfd-session 2
```

配置文件

- RouterA的配置文件

```
#
vlan batch 100 200
#
ip vpn-instance wan1
 ipv4-family
  route-distinguisher 192.168.10.1:0
#
ip vpn-instance wan2
 ipv4-family
  route-distinguisher 192.168.20.1:0
#
bfd
#
interface GigabitEthernet0/0/1
 undo portswitch
 tcp adjust-mss 1200
 map interface Virtual-Ethernet0/0/0
#
interface GigabitEthernet0/0/8
 ip binding vpn-instance wan1
 ip address 192.168.10.1 255.255.255.0
#
interface GigabitEthernet0/0/9
 ip binding vpn-instance wan2
 ip address 192.168.20.1 255.255.255.0
#
interface Virtual-Ethernet0/0/0
 portswitch
 port link-type access
 port default vlan 200
#
interface Virtual-Ethernet0/0/1
 portswitch
 port link-type trunk
 undo port trunk allow-pass vlan 1
 port trunk allow-pass vlan 200
#
interface LoopBack0
 ip address 1.1.1.1 255.255.255.0
#
interface Tunnel0/0/0
 description key1
 ip address 172.16.1.1 255.255.255.0
 tunnel-protocol gre
 gre key plain 1
 source GigabitEthernet0/0/8
 destination vpn-instance wan1 10.172.10.2
 replication path-group 1
#
interface Tunnel0/0/1
 description key2
 ip address 172.16.2.1 255.255.255.0
 tunnel-protocol gre
 gre key plain 2
 source GigabitEthernet0/0/9
 destination vpn-instance wan2 10.172.10.2
#
interface Tunnel0/0/2
 ip address 172.16.3.1 255.255.255.0
 tunnel-protocol gre
 gre key plain 3
```

```
 source GigabitEthernet0/0/8
 destination vpn-instance wan1 10.172.20.2
 replication path-group 2
#
interface Tunnel0/0/3
 ip address 172.16.4.1 255.255.255.0
 tunnel-protocol gre
 gre key plain 4
 source GigabitEthernet0/0/9
 destination vpn-instance wan2 10.172.20.2
#
interface Tunnel0/0/4
 ip address 172.16.5.1 255.255.255.0
 tunnel-protocol gre
 gre key plain 5
 source LoopBack0
 destination 192.168.255.254
 map interface Virtual-Ethernet0/0/1
#
bfd 1 bind peer-ip 172.16.1.2 source-ip 172.16.1.1
 discriminator local 1
 discriminator remote 2
 commit
#
bfd 2 bind peer-ip 172.16.2.2 source-ip 172.16.2.1
 discriminator local 3
 discriminator remote 4
 commit
#
bfd 3 bind peer-ip 172.16.3.2 source-ip 172.16.3.1
 discriminator local 5
 discriminator remote 6
 commit
#
bfd 4 bind peer-ip 172.16.4.2 source-ip 172.16.4.1
 discriminator local 7
 discriminator remote 8
 commit
#
ip route-static 192.168.255.254 255.255.255.255 Tunnel0/0/0 track bfd-session 1
ip route-static 192.168.255.254 255.255.255.255 Tunnel0/0/1 preference 70 track bfd-session 2
ip route-static 192.168.255.254 255.255.255.255 Tunnel0/0/2 preference 80 track bfd-session 3
ip route-static 192.168.255.254 255.255.255.255 Tunnel0/0/3 preference 90 track bfd-session 4
ip route-static vpn-instance wan1 10.172.0.0 255.255.0.0 192.168.10.254
ip route-static vpn-instance wan2 10.172.0.0 255.255.0.0 192.168.20.254
#
replication path-group 1
 path Tunnel0/0/1 priority 1
replication path-group 2
 path Tunnel0/0/3 priority 1
#
```

- RouterC的配置文件

```
#
vlan batch 100 200
#
bfd
#
interface Vlanif100
 ip address 192.168.255.2 255.255.255.0
 vrrp vrid 1 virtual-ip 192.168.255.254
#
interface Vlanif200
 map interface Virtual-Ethernet0/0/0
#
interface Eth-Trunk0
 port link-type trunk
 undo port trunk allow-pass vlan 1
 port trunk allow-pass vlan 100 200
#
```

```
interface GigabitEthernet0/0/1
 portswitch
 eth-trunk 0
#
interface GigabitEthernet0/0/2
 portswitch
 eth-trunk 0
#
interface GigabitEthernet0/0/4
 portswitch
 port link-type trunk
 port trunk allow-pass vlan 100 200
#
interface XGigabitEthernet0/0/0
 ip address 10.172.20.2 255.255.255.0
#
interface Virtual-Ethernet0/0/0
 portswitch
 port link-type trunk
 undo port trunk allow-pass vlan 1
 port trunk allow-pass vlan 200
#
interface Virtual-Ethernet0/0/1
 portswitch
 port link-type trunk
 undo port trunk allow-pass vlan 1
 port trunk allow-pass vlan 200
#
interface Tunnel0/0/0
 ip address 172.16.3.2 255.255.255.0
 tunnel-protocol gre
 gre key plain 3
 source XGigabitEthernet0/0/0
 destination 192.168.10.1
 replication path-group 1
#
interface Tunnel0/0/1
 ip address 172.16.4.2 255.255.255.0
 tunnel-protocol gre
 gre key plain 4
 source XGigabitEthernet0/0/0
 destination 192.168.20.1
#
interface Tunnel0/0/2
 ip address 172.16.5.2 255.255.255.0
 tunnel-protocol gre
 gre key plain 5
 source 192.168.255.254
 destination 1.1.1.1
 map interface Virtual-Ethernet0/0/1
#
bfd 1 bind peer-ip 172.16.3.1 source-ip 172.16.3.2
 discriminator local 6
 discriminator remote 5
 commit
#
bfd 2 bind peer-ip 172.16.4.1 source-ip 172.16.4.2
 discriminator local 8
 discriminator remote 7
 commit
#
ip route-static 1.1.1.1 255.255.255.255 Tunnel0/0/0 track bfd-session 1
ip route-static 1.1.1.1 255.255.255.255 Tunnel0/0/1 preference 70 track bfd-session 2
ip route-static 192.168.0.0 255.255.0.0 10.172.20.1
#
replication path-group 1
 path Tunnel0/0/1 priority 1
#
```

- RouterD的配置文件

```
#
vlan batch 100 200
#
stp instance 0 root primary
#
interface Vlanif100
 ip address 192.168.255.1 255.255.255.0
 vrrp vrid 1 virtual-ip 192.168.255.254
 vrrp vrid 1 priority 120
 vrrp vrid 1 track interface XGigabitEthernet0/0/0 reduced 40
#
interface Vlanif200
 map interface Virtual-Ethernet0/0/0
#
interface Eth-Trunk0
 port link-type trunk
 undo port trunk allow-pass vlan 1
 port trunk allow-pass vlan 100 200
#
interface GigabitEthernet0/0/0
 portswitch
 eth-trunk 0
#
interface GigabitEthernet0/0/1
 portswitch
 eth-trunk 0
#
interface XGigabitEthernet0/0/0
 ip address 10.172.10.2 255.255.255.0
#
interface XGigabitEthernet0/0/1
 portswitch
 port link-type trunk
 undo port trunk allow-pass vlan 1
 port trunk allow-pass vlan 100 200
#
interface Virtual-Ethernet0/0/0
 portswitch
 port link-type trunk
 undo port trunk allow-pass vlan 1
 port trunk allow-pass vlan 200
#
interface Virtual-Ethernet0/0/1
 portswitch
 port link-type trunk
 undo port trunk allow-pass vlan 1
 port trunk allow-pass vlan 200
#
interface Tunnel0/0/0
 description key1
 ip address 172.16.1.2 255.255.255.0
 tunnel-protocol gre
 gre key plain 1
 source XGigabitEthernet0/0/0
 destination 192.168.10.1
 replication path-group 1
#
interface Tunnel0/0/1
 description key2
 ip address 172.16.2.2 255.255.255.0
 tunnel-protocol gre
 gre key plain 2
 source XGigabitEthernet0/0/0
 destination 192.168.20.1
#
interface Tunnel0/0/2
 ip address 172.16.5.2 255.255.255.0
 tunnel-protocol gre
 gre key plain 5
```

```
 source 192.168.255.254
 destination 1.1.1.1
 map interface Virtual-Ethernet0/0/1
#
bfd 1 bind peer-ip 172.16.1.1 source-ip 172.16.1.2
 discriminator local 2
 discriminator remote 1
 commit
#
bfd 2 bind peer-ip 172.16.2.1 source-ip 172.16.2.2
 discriminator local 4
 discriminator remote 3
 commit
#
ip route-static 1.1.1.1 255.255.255.255 Tunnel0/0/0 track bfd-session 1
ip route-static 1.1.1.1 255.255.255.255 Tunnel0/0/1 preference 70 track bfd-session 2
ip route-static 192.168.0.0 255.255.0.0 10.172.10.1
#
replication path-group 1
 path Tunnel0/0/1 priority 1
#
```

- RouterE的配置文件

```
#
interface GigabitEthernet0/0/0
 stp disable
 port link-type trunk
 undo port trunk allow-pass vlan 1
 port trunk allow-pass vlan 200
#
interface GigabitEthernet0/0/1
 port link-type trunk
 undo port trunk allow-pass vlan 1
 port trunk allow-pass vlan 100 200
#
interface GigabitEthernet0/0/2
 port link-type trunk
 undo port trunk allow-pass vlan 1
 port trunk allow-pass vlan 100 200
#
```

7.2.11 配置二层重定向多发选收示例（5G CPE 场景）

组网需求

说明

AR设备配置多个GE子接口与5G CPE（N5368X）桥接模式对接时，由于CPE使用场景约束，AR设备需要使用子接口下的MAC地址修改功能保证CPE学习MAC地址的唯一性。

如图7-14所示，RouterA为企业分支网关，RouterC和RouterD为企业总部网关，用户希望实现：

- 正常情况下，RouterC为Master设备承担流量转发，当RouterC故障时，RouterD接替作为网关继续进行工作，实现网关的冗余备份。
- 分支和总部可以传输原始以太报文（如工业控制的PLC报文），采用二层隧道封装。
- 分支网关RouterA接口GE0/0/8所在链路作为主链路，GE0/0/9所在链路作为复制链路。
- 如果RouterA主链路故障，通过复制链路转发报文，优选RouterC进行流量转发。如果总部RouterC网关LAN侧网络或中间链路故障，RouterA选择RouterD进行流量转发。

- 报文复制过程忽略接口状态和路由状态，最大程度保证业务连续性。

图 7-14 配置二层重定向多发选收组网图

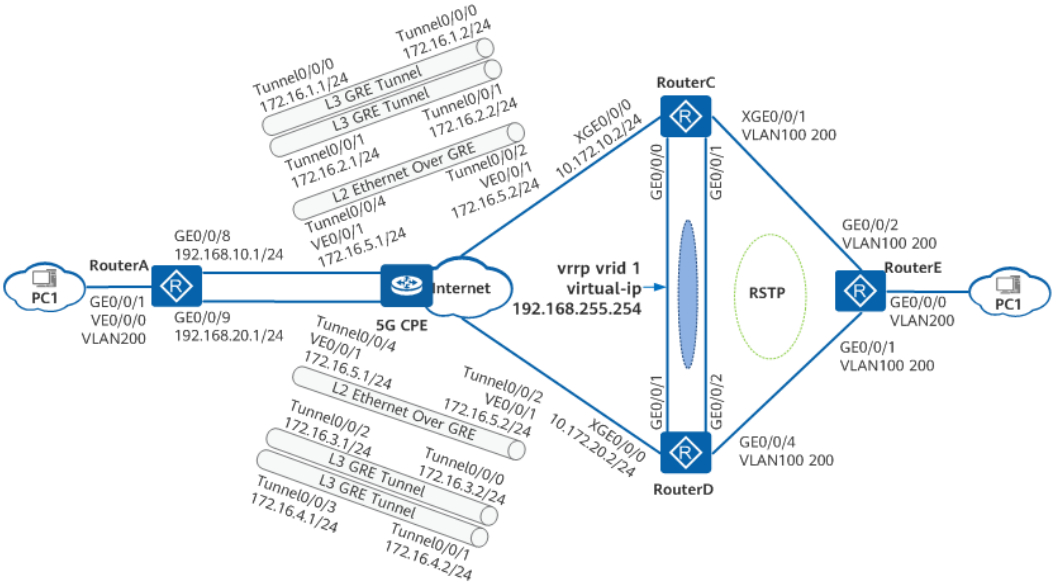

数据准备

表 7-18 数据准备表

项目	数据	说明
分支RouterA LAN侧接口信息	LAN侧物理接口：GE0/0/1 绑定的VE接口：VE0/0/0 所属VLAN：200	分支RouterA与分支用户之间的链路信息。
分支RouterA WAN侧接口信息	主链路物理接口：GE0/0/8 IP地址：192.168.10.1/24 绑定VPN实例：wan1 复制链路物理接口：GE0/0/9 IP地址：192.168.20.1/24 绑定VPN实例：wan2	分支RouterA与5G CPE之间的链路信息。
分支RouterA Tunnel0/0/0接口信息	IP地址：172.16.1.1/24 源接口：GE0/0/8	分支RouterA和总部RouterC之间的L3 GRE隧道信息。
分支RouterA Tunnel0/0/1接口信息	IP地址：172.16.2.1/24 源接口：GE0/0/9	分支RouterA和总部RouterC之间的L3 GRE隧道信息。
分支RouterA Tunnel0/0/2接口信息	IP地址：172.16.3.1/24 源接口：GE0/0/8	分支RouterA和总部RouterD之间的L3 GRE隧道信息。

项目	数据	说明
分支RouterA Tunnel0/0/3接口信息	IP地址：172.16.4.1/24 源接口：GE0/0/9	分支RouterA和总部RouterD之间的L3 GRE隧道信息。
分支RouterA Tunnel0/0/4接口信息	IP地址：172.16.5.1/24 源接口：LoopBack0 绑定的VE接口：VE0/0/1	分支RouterA和总部RouterC以及RouterD之间的Ethernet over GRE隧道信息。
总部RouterC LAN侧接口信息	LAN侧物理接口：XGE0/0/1 所属VLAN：100、200	总部RouterC与分支RouterE之间的链路信息。
总部RouterC WAN侧接口信息	WAN侧物理接口：XGE0/0/0 IP地址：10.172.10.2/24	总部RouterC与Internet之间的链路信息。
总部RouterC Tunnel0/0/0接口信息	IP地址：172.16.1.2/24 源接口：XGE0/0/0	总部RouterC和分支RouterA之间的L3 GRE隧道信息。
总部RouterC Tunnel0/0/1接口信息	IP地址：172.16.2.2/24 源接口：XGE0/0/0	总部RouterC和分支RouterA之间的L3 GRE隧道信息。
总部RouterC Tunnel0/0/2接口信息	IP地址：172.16.5.2/24 源地址：192.168.255.254（VRRP备份组的虚拟IP地址） 绑定的VE接口：VE0/0/1	总部RouterC和分支RouterA之间的Ethernet over GRE隧道信息。
总部RouterD LAN侧接口信息	LAN侧物理接口：GE0/0/4 所属VLAN：100、200	总部RouterD与分支RouterE之间的链路信息。
总部RouterD WAN侧接口信息	WAN侧物理接口：XGE0/0/0 IP地址：10.172.20.2/24	总部RouterD与Internet之间的链路信息。
总部RouterD Tunnel0/0/0接口信息	IP地址：172.16.3.2/24 源接口：XGE0/0/0	总部RouterD和分支RouterA之间的L3 GRE隧道信息。
总部RouterD Tunnel0/0/1接口信息	IP地址：172.16.4.2/24 源接口：XGE0/0/0	总部RouterD和分支RouterA之间的L3 GRE隧道信息。
总部RouterD Tunnel0/0/2接口信息	IP地址：172.16.5.2/24 源地址：192.168.255.254（VRRP备份组的虚拟IP地址） 绑定的VE接口：VE0/0/1	总部RouterD和分支RouterA之间的Ethernet over GRE隧道信息。

项目	数据	说明
分支RouterE LAN侧接口信息	LAN侧物理接口1：GE0/0/0 所属VLAN：200 LAN侧物理接口2：GE0/0/1 所属VLAN：100、200 LAN侧物理接口3：GE0/0/2 所属VLAN：100、200	GE0/0/0为分支RouterE与分支用户之间的接口。 GE0/0/1为分支RouterE与总部RouterD之间的接口。 GE0/0/2为分支RouterE与总部RouterC之间的接口。

配置思路

本例配置的主要思路是：

1. 配置设备物理接口的IP地址及静态路由，实现设备之间三层网络互通，同时，在RouterA上创建不同的VPN实例，实现不同VPN间的业务隔离。
2. 在RouterA和RouterC、RouterD之间部署GRE隧道，通过静态路由指定到达对端的报文通过GRE隧道转发，实现Underlay传输网络互通，用于三层报文多发选收。
3. 配置Overlay业务网络互通。
   - 在LAN侧的接口和WAN侧的Tunnel接口上分别绑定二层VE接口，实现以太报文通过GRE隧道进行透传，且配置WAN侧Tunnel接口的源接口为Loopback接口用于实现二层报文多发选收。
   - RouterC和RouterD配置RSTP功能，破除二层网络中的环路。
   - RouterC和RouterD配置Eth-Trunk保证连接的可靠性。
4. 在RouterA、RouterC和RouterD上分别配置BFD会话，实现设备间链路故障的快速检测。
5. 在RouterC和RouterD上配置VRRP备份组。RouterC上配置较高优先级，作为Master设备承担流量转发；RouterD作为备用路由器，实现网关冗余备份，同时，配置VRRP与BFD联动，实现链路故障时VRRP备份组快速切换。
6. 在源接口为Loopback接口的内层Ethernet Over GRE隧道上配置重定向多发选收功能，并指定链路组不根据链路状态刷新选路信息，避免路由切换过程中出现的丢包现象，最大程度保证业务连续性。
7. 配置设备间使用OSPF路由，且使能OSPF BFD检测机制，当链路出现故障时，BFD能够快速检测到故障并通告给OSPF协议，使业务流量使用等价链路传送。

说明

用户可以根据现网实际情况配置BFD报文的接收和发送间隔。

操作步骤

1. 配置设备物理接口的IP地址及静态路由，实现设备之间三层网络互通。

   # 配置RouterA物理接口的IP地址及静态路由，在RouterA上创建不同的VPN实例，实现不同VPN间的业务隔离。

```
<Huawei> system-view
[Huawei] sysname RouterA
[RouterA] router id 1.1.1.1
[RouterA] ip vpn-instance wan1
[RouterA-vpn-instance-wan1] ipv4-family
[RouterA-vpn-instance-wan1-af-ipv4] route-distinguisher 192.168.10.1:0
[RouterA-vpn-instance-wan1-af-ipv4] quit
[RouterA-vpn-instance-wan1] quit
[RouterA] ip vpn-instance wan2
[RouterA-vpn-instance-wan2] ipv4-family
[RouterA-vpn-instance-wan2-af-ipv4] route-distinguisher 192.168.20.1:0
[RouterA-vpn-instance-wan2-af-ipv4] quit
[RouterA-vpn-instance-wan2] quit
[RouterA] interface gigabitethernet 0/0/8
[RouterA-GigabitEthernet0/0/8] ip binding vpn-instance wan1
[RouterA-GigabitEthernet0/0/8] ip address 192.168.10.1 255.255.255.0
[RouterA-GigabitEthernet0/0/8] quit
[RouterA] interface gigabitethernet 0/0/9
[RouterA-GigabitEthernet0/0/9] ip binding vpn-instance wan2
[RouterA-GigabitEthernet0/0/9] ip address 192.168.20.1 255.255.255.0
[RouterA-GigabitEthernet0/0/9] quit
[RouterA] ip route-static vpn-instance wan1 10.172.0.0 255.255.0.0 192.168.10.254
[RouterA] ip route-static vpn-instance wan2 10.172.0.0 255.255.0.0 192.168.20.254
```

配置RouterC物理接口的IP地址及静态路由。

```
<Huawei> system-view
[Huawei] sysname RouterC
[RouterC] router id 10.172.10.2
[RouterC] interface XGigabitEthernet0/0/0
[RouterC-XGigabitEthernet0/0/0] ip address 10.172.10.2 255.255.255.0
[RouterC-XGigabitEthernet0/0/0] quit
[RouterC] ip route-static 192.168.0.0 255.255.0.0 10.172.10.1
```

配置RouterD物理接口的IP地址及静态路由。

```
<Huawei> system-view
[Huawei] sysname RouterD
[RouterD] router id 10.172.20.2
[RouterD] interface XGigabitEthernet0/0/0
[RouterD-XGigabitEthernet0/0/0] ip address 10.172.20.2 255.255.255.0
[RouterD-XGigabitEthernet0/0/0] quit
[RouterD] ip route-static 192.168.0.0 255.255.0.0 10.172.20.1
```

2. 在RouterA和RouterC、RouterD之间部署GRE隧道，通过静态路由指定到达对端的报文通过GRE隧道转发，实现Underlay传输网络互通，用于三层报文多发选收。

   # 在RouterA上创建Tunnel接口，并配置接口路由。

```
[RouterA] interface Tunnel0/0/0
[RouterA-Tunnel0/0/0] description key1
[RouterA-Tunnel0/0/0] ip address 172.16.1.1 255.255.255.0
[RouterA-Tunnel0/0/0] tunnel-protocol gre
[RouterA-Tunnel0/0/0] keepalive period 1
[RouterA-Tunnel0/0/0] gre key plain 1
[RouterA-Tunnel0/0/0] source GigabitEthernet0/0/8
[RouterA-Tunnel0/0/0] destination vpn-instance wan1 10.172.10.2
[RouterA-Tunnel0/0/0] ospf enable 1 area 0.0.0.0
[RouterA-Tunnel0/0/0] quit
[RouterA] interface Tunnel0/0/1
[RouterA-Tunnel0/0/1] description key2
[RouterA-Tunnel0/0/1] ip address 172.16.2.1 255.255.255.0
[RouterA-Tunnel0/0/1] tunnel-protocol gre
[RouterA-Tunnel0/0/1] keepalive period 1
[RouterA-Tunnel0/0/1] gre key plain 2
[RouterA-Tunnel0/0/1] source GigabitEthernet0/0/9
[RouterA-Tunnel0/0/1] destination vpn-instance wan2 10.172.10.2
[RouterA-Tunnel0/0/1] ospf enable 1 area 0.0.0.0
[RouterA-Tunnel0/0/1] quit
[RouterA] interface Tunnel0/0/2
[RouterA-Tunnel0/0/2] ip address 172.16.3.1 255.255.255.0
[RouterA-Tunnel0/0/2] tunnel-protocol gre
```

```
[RouterA-Tunnel0/0/2] gre key plain 3
[RouterA-Tunnel0/0/2] source GigabitEthernet0/0/8
[RouterA-Tunnel0/0/2] destination vpn-instance wan1 10.172.20.2
[RouterA-Tunnel0/0/2] ospf enable 1 area 0.0.0.0
[RouterA-Tunnel0/0/2] quit
[RouterA] interface Tunnel0/0/3
[RouterA-Tunnel0/0/3] ip address 172.16.4.1 255.255.255.0
[RouterA-Tunnel0/0/3] tunnel-protocol gre
[RouterA-Tunnel0/0/3] gre key plain 4
[RouterA-Tunnel0/0/3] source GigabitEthernet0/0/9
[RouterA-Tunnel0/0/3] destination vpn-instance wan2 10.172.20.2
[RouterA-Tunnel0/0/3] ospf enable 1 area 0.0.0.0
[RouterA-Tunnel0/0/3] quit
```

在RouterC上创建Tunnel接口，并配置接口路由。

```
[RouterC] interface Tunnel0/0/0
[RouterC-Tunnel0/0/0] description key1
[RouterC-Tunnel0/0/0] ip address 172.16.1.2 255.255.255.0
[RouterC-Tunnel0/0/0] tunnel-protocol gre
[RouterC-Tunnel0/0/0] gre key plain 1
[RouterC-Tunnel0/0/0] source XGigabitEthernet0/0/0
[RouterC-Tunnel0/0/0] destination 192.168.10.1
[RouterC-Tunnel0/0/0] ospf enable 1 area 0.0.0.0
[RouterC-Tunnel0/0/0] quit
[RouterC] interface Tunnel0/0/1
[RouterC-Tunnel0/0/1] description key2
[RouterC-Tunnel0/0/1] ip address 172.16.2.2 255.255.255.0
[RouterC-Tunnel0/0/1] tunnel-protocol gre
[RouterC-Tunnel0/0/1] gre key plain 2
[RouterC-Tunnel0/0/1] source XGigabitEthernet0/0/0
[RouterC-Tunnel0/0/1] destination 192.168.20.1
[RouterC-Tunnel0/0/1] ospf enable 1 area 0.0.0.0
[RouterC-Tunnel0/0/1] quit
```

在RouterD上创建Tunnel接口，并配置接口路由。

```
[RouterD] interface Tunnel0/0/0
[RouterD-Tunnel0/0/0] ip address 172.16.3.2 255.255.255.0
[RouterD-Tunnel0/0/0] tunnel-protocol gre
[RouterD-Tunnel0/0/0] gre key plain 3
[RouterD-Tunnel0/0/0] source XGigabitEthernet0/0/0
[RouterD-Tunnel0/0/0] destination 192.168.10.1
[RouterD-Tunnel0/0/0] ospf enable 1 area 0.0.0.0
[RouterD-Tunnel0/0/0] quit
[RouterD] interface Tunnel0/0/1
[RouterD-Tunnel0/0/1] ip address 172.16.4.2 255.255.255.0
[RouterD-Tunnel0/0/1] tunnel-protocol gre
[RouterD-Tunnel0/0/1] gre key plain 4
[RouterD-Tunnel0/0/1] source XGigabitEthernet0/0/0
[RouterD-Tunnel0/0/1] destination 192.168.20.1
[RouterD-Tunnel0/0/1] ospf enable 1 area 0.0.0.0
[RouterD-Tunnel0/0/1] quit
```

配置完成后Tunnel接口状态变为Up，Tunnel接口之间可以Ping通，直连隧道建立。以RouterA的显示为例。

```
<RouterA> ping 172.16.1.2
  PING 172.16.1.2: 56  data bytes, press CTRL_C to break
    Reply from 172.16.1.2: bytes=56 Sequence=1 ttl=255 time=1 ms
    Reply from 172.16.1.2: bytes=56 Sequence=2 ttl=255 time=1 ms
    Reply from 172.16.1.2: bytes=56 Sequence=3 ttl=255 time=1 ms
    Reply from 172.16.1.2: bytes=56 Sequence=4 ttl=255 time=1 ms
    Reply from 172.16.1.2: bytes=56 Sequence=5 ttl=255 time=1 ms
  --- 172.16.1.2 ping statistics ---
    5 packet(s) transmitted
    5 packet(s) received
    0.00% packet loss
    round-trip min/avg/max = 1/1/1 ms
```

3. 配置Overlay业务网络互通。在LAN侧的接口和WAN侧的Tunnel接口上分别绑定二层VE接口，实现以太报文通过GRE隧道进行透传，且配置WAN侧Tunnel接口的源接口为Loopback接口用于实现二层报文多发选收。

   # 配置RouterA。

```
[RouterA] interface LoopBack0
[RouterA-LoopBack0] ip address 1.1.1.1 255.255.255.0
[RouterA-LoopBack0] quit
[RouterA] vlan batch 100 200
[RouterA] interface Virtual-Ethernet0/0/0
[RouterA-Virtual-Ethernet0/0/0] portswitch
[RouterA-Virtual-Ethernet0/0/0] port link-type access
[RouterA-Virtual-Ethernet0/0/0] port default vlan 200
[RouterA-Virtual-Ethernet0/0/0] quit
[RouterA] interface Virtual-Ethernet0/0/1
[RouterA-Virtual-Ethernet0/0/1] portswitch
[RouterA-Virtual-Ethernet0/0/1] port link-type trunk
[RouterA-Virtual-Ethernet0/0/1] undo port trunk allow-pass vlan 1
[RouterA-Virtual-Ethernet0/0/1] port trunk allow-pass vlan 200
[RouterA-Virtual-Ethernet0/0/1] quit
[RouterA] interface gigabitethernet 0/0/1
[RouterA-GigabitEthernet0/0/1] undo portswitch
[RouterA-GigabitEthernet0/0/1] tcp adjust-mss 1200
[RouterA-GigabitEthernet0/0/1] map interface Virtual-Ethernet0/0/0
[RouterA-GigabitEthernet0/0/1] quit
[RouterA] interface Tunnel0/0/4
[RouterA-Tunnel0/0/4] ip address 172.16.5.1 255.255.255.0
[RouterA-Tunnel0/0/4] tunnel-protocol gre
[RouterA-Tunnel0/0/4] gre key plain 5
[RouterA-Tunnel0/0/4] source LoopBack0
[RouterA-Tunnel0/0/4] destination 192.168.255.254
[RouterA-Tunnel0/0/4] map interface Virtual-Ethernet0/0/1
[RouterA-Tunnel0/0/4] quit
```

   # 配置RouterC。

   – 配置RSTP功能，破除二层网络中的环路。
   – 配置Eth-Trunk保证连接的可靠性。

```
[RouterC] stp mode rstp
[RouterC] stp instance 0 root primary
[RouterC] stp pathcost-standard legacy
[RouterC] vlan batch 100 200
[RouterC] interface Eth-Trunk0
[RouterC-Eth-Trunk0] port link-type trunk
[RouterC-Eth-Trunk0] undo port trunk allow-pass vlan 1
[RouterC-Eth-Trunk0] port trunk allow-pass vlan 100 200
[RouterC-Eth-Trunk0] quit
[RouterC] interface gigabitethernet0/0/0
[RouterC-GigabitEthernet0/0/0] portswitch
[RouterC-GigabitEthernet0/0/0] eth-trunk 0
[RouterC-GigabitEthernet0/0/0] quit
[RouterC] interface gigabitethernet0/0/1
[RouterC-GigabitEthernet0/0/1] portswitch
[RouterC-GigabitEthernet0/0/1] eth-trunk 0
[RouterC-GigabitEthernet0/0/1] quit
[RouterC] interface XGigabitEthernet0/0/1
[RouterC-GigabitEthernet0/0/1] portswitch
[RouterC-GigabitEthernet0/0/1] port link-type trunk
[RouterC-GigabitEthernet0/0/1] undo port trunk allow-pass vlan 1
[RouterC-GigabitEthernet0/0/1] port trunk allow-pass vlan 100 200
[RouterC-GigabitEthernet0/0/1] stp root-protection
[RouterC-GigabitEthernet0/0/1] quit
[RouterC] interface Virtual-Ethernet0/0/0
[RouterC-Virtual-Ethernet0/0/0] portswitch
[RouterC-Virtual-Ethernet0/0/0] port link-type trunk
[RouterC-Virtual-Ethernet0/0/0] undo port trunk allow-pass vlan 1
[RouterC-Virtual-Ethernet0/0/0] port trunk allow-pass vlan 200
[RouterC-Virtual-Ethernet0/0/0] quit
```

```
[RouterC] interface Virtual-Ethernet0/0/1
[RouterC-Virtual-Ethernet0/0/1] portswitch
[RouterC-Virtual-Ethernet0/0/1] port link-type trunk
[RouterC-Virtual-Ethernet0/0/1] undo port trunk allow-pass vlan 1
[RouterC-Virtual-Ethernet0/0/1] port trunk allow-pass vlan 200
[RouterC-Virtual-Ethernet0/0/1] quit
[RouterC] interface Vlanif200
[RouterC-Vlanif200] map interface Virtual-Ethernet0/0/0
[RouterC-Vlanif200] quit
[RouterC] interface Tunnel0/0/2
[RouterC-Tunnel0/0/2] ip address 172.16.5.2 255.255.255.0
[RouterC-Tunnel0/0/2] tunnel-protocol gre
[RouterC-Tunnel0/0/2] gre key plain 5
[RouterC-Tunnel0/0/2] source 192.168.255.254
[RouterC-Tunnel0/0/2] destination 1.1.1.1
[RouterC-Tunnel0/0/2] map interface Virtual-Ethernet0/0/1
[RouterC-Tunnel0/0/2] quit
```

配置RouterD。

- 配置RSTP功能，破除二层网络中的环路。
- 配置Eth-Trunk保证连接的可靠性。

```
[RouterD] stp mode rstp
[RouterD] stp pathcost-standard legacy
[RouterD] vlan batch 100 200
[RouterD] interface Eth-Trunk0
[RouterD-Eth-Trunk0] port link-type trunk
[RouterD-Eth-Trunk0] undo port trunk allow-pass vlan 1
[RouterD-Eth-Trunk0] port trunk allow-pass vlan 100 200
[RouterD-Eth-Trunk0] quit
[RouterD] interface gigabitethernet0/0/1
[RouterD-GigabitEthernet0/0/1] portswitch
[RouterD-GigabitEthernet0/0/1] eth-trunk 0
[RouterD-GigabitEthernet0/0/1] quit
[RouterD] interface gigabitethernet0/0/2
[RouterD-GigabitEthernet0/0/2] portswitch
[RouterD-GigabitEthernet0/0/2] eth-trunk 0
[RouterD-GigabitEthernet0/0/2] quit
[RouterD] interface GigabitEthernet0/0/4
[RouterD-GigabitEthernet0/0/4] portswitch
[RouterD-GigabitEthernet0/0/4] port link-type trunk
[RouterD-GigabitEthernet0/0/4] port trunk allow-pass vlan 100 200
[RouterD-GigabitEthernet0/0/4] quit
[RouterD] interface Virtual-Ethernet0/0/0
[RouterD-Virtual-Ethernet0/0/0] portswitch
[RouterD-Virtual-Ethernet0/0/0] port link-type trunk
[RouterD-Virtual-Ethernet0/0/0] undo port trunk allow-pass vlan 1
[RouterD-Virtual-Ethernet0/0/0] port trunk allow-pass vlan 200
[RouterD-Virtual-Ethernet0/0/0] quit
[RouterD] interface Virtual-Ethernet0/0/1
[RouterD-Virtual-Ethernet0/0/1] portswitch
[RouterD-Virtual-Ethernet0/0/1] port link-type trunk
[RouterD-Virtual-Ethernet0/0/1] undo port trunk allow-pass vlan 1
[RouterD-Virtual-Ethernet0/0/1] port trunk allow-pass vlan 200
[RouterD-Virtual-Ethernet0/0/1] quit
[RouterD] interface Vlanif200
[RouterD-Vlanif200] map interface Virtual-Ethernet0/0/0
[RouterD-Vlanif200] quit
[RouterD] interface Tunnel0/0/2
[RouterD-Tunnel0/0/2] ip address 172.16.5.2 255.255.255.0
[RouterD-Tunnel0/0/2] tunnel-protocol gre
[RouterD-Tunnel0/0/2] gre key plain 5
[RouterD-Tunnel0/0/2] source 192.168.255.254
[RouterD-Tunnel0/0/2] destination 1.1.1.1
[RouterD-Tunnel0/0/2] map interface Virtual-Ethernet0/0/1
[RouterD-Tunnel0/0/2] quit
```

配置RouterE的接口加入VLAN。

```
<Huawei> system-view
[Huawei] sysname RouterE
[RouterE] stp mode rstp
[RouterE] stp pathcost-standard legacy
[RouterE] interface gigabitethernet 0/0/0
[RouterE-GigabitEthernet0/0/0] description lan
[RouterE-GigabitEthernet0/0/0] port link-type trunk
[RouterE-GigabitEthernet0/0/0] undo port trunk allow-pass vlan 1
[RouterE-GigabitEthernet0/0/0] port trunk allow-pass vlan 200
[RouterE-GigabitEthernet0/0/0] stp disable
[RouterE-GigabitEthernet0/0/0] quit
[RouterE] interface gigabitethernet 0/0/1
[RouterE-GigabitEthernet0/0/1] port link-type trunk
[RouterE-GigabitEthernet0/0/1] undo port trunk allow-pass vlan 1
[RouterE-GigabitEthernet0/0/1] port trunk allow-pass vlan 100 200
[RouterE-GigabitEthernet0/0/1] quit
[RouterE] interface gigabitethernet 0/0/2
[RouterE-GigabitEthernet0/0/2] port link-type trunk
[RouterE-GigabitEthernet0/0/2] undo port trunk allow-pass vlan 1
[RouterE-GigabitEthernet0/0/2] port trunk allow-pass vlan 100 200
[RouterE-GigabitEthernet0/0/2] quit
```

4. 配置BFD会话，实现设备间链路故障的快速检测。

   # 配置RouterA。

```
[RouterA] bfd
[RouterA-bfd] quit
[RouterA] bfd 1 bind peer-ip 172.16.1.2 source-ip 172.16.1.1
[RouterA-bfd-session-1] discriminator local 1
[RouterA-bfd-session-1] discriminator remote 2
[RouterA-bfd-session-1] commit
[RouterA-bfd-session-1] quit
[RouterA] bfd 2 bind peer-ip 172.16.2.2 source-ip 172.16.2.1
[RouterA-bfd-session-2] discriminator local 3
[RouterA-bfd-session-2] discriminator remote 4
[RouterA-bfd-session-2] commit
[RouterA-bfd-session-2] quit
[RouterA] bfd tohub bind peer-ip 192.168.255.254 source-ip 1.1.1.1
[RouterA-bfd-session-tohub] discriminator local 5
[RouterA-bfd-session-tohub] discriminator remote 6
[RouterA-bfd-session-tohub] commit
[RouterA-bfd-session-tohub] quit
```

   # 配置RouterC。

```
[RouterC] bfd
[RouterC-bfd] quit
[RouterC] bfd 1 bind peer-ip 172.16.1.1 source-ip 172.16.1.2
[RouterC-bfd-session-1] discriminator local 2
[RouterC-bfd-session-1] discriminator remote 1
[RouterC-bfd-session-1] description 1
[RouterC-bfd-session-1] commit
[RouterC-bfd-session-1] quit
[RouterC] bfd 2 bind peer-ip 172.16.2.1 source-ip 172.16.2.2
[RouterC-bfd-session-2] discriminator local 4
[RouterC-bfd-session-2] discriminator remote 3
[RouterC-bfd-session-2] commit
[RouterC-bfd-session-2] quit
[RouterC] bfd tospoke bind peer-ip 1.1.1.1 source-ip 192.168.255.254
[RouterC-bfd-session-tospoke] discriminator local 6
[RouterC-bfd-session-tospoke] discriminator remote 5
[RouterC-bfd-session-tospoke] commit
[RouterC-bfd-session-tospoke] quit
```

   # 配置完成后，在RouterA执行**display bfd session all**命令，可以看到建立了BFD会话，且状态为Up。

```
<RouterA> display bfd session all
--------------------------------------------------------------------------------
Local Remote     PeerIpAddr        State     Type        InterfaceName
--------------------------------------------------------------------------------
1     2          172.16.1.2        Up        S_IP_PEER        -
```

```
3    4         172.16.2.2         Up       S_IP_PEER         -
5    6         192.168.255.254    Up       S_IP_PEER         -
--------------------------------------------------------------------------------
    Total UP/DOWN Session Number : 3/0
```

配置完成后，在RouterC执行**display bfd session all**命令，可以看到建立了BFD会话，且状态为Up。

```
<RouterC> display bfd session all
--------------------------------------------------------------------------------

Local Remote     PeerIpAddr       State     Type
InterfaceName
--------------------------------------------------------------------------------

2    1         172.16.1.1       Up       S_IP_PEER         -
4    3         172.16.2.1       Up       S_IP_PEER         -
6    5         1.1.1.1          Up       S_IP_PEER         -
--------------------------------------------------------------------------------

    Total UP/DOWN Session Number :
3/0
```

5. 配置VRRP主备备份。RouterC上配置较高优先级，作为Master设备承担流量转发；RouterD作为备用路由器，实现网关冗余备份。同时，配置VRRP与BFD联动，实现链路故障时VRRP备份组快速切换。

   # 配置RouterC。

```
[RouterC] interface Vlanif100
[RouterC-Vlanif100] ip address 192.168.255.1 255.255.255.0
[RouterC-Vlanif100] vrrp vrid 1 virtual-ip 192.168.255.254
[RouterC-Vlanif100] vrrp vrid 1 priority 120
[RouterC-Vlanif100] vrrp vrid 1 track bfd-session 2 reduced 15
[RouterC-Vlanif100] vrrp vrid 1 track bfd-session 4 reduced 15
[RouterC-Vlanif100] vrrp vrid 1 track interface XGigabitEthernet0/0/0 reduced 30
[RouterC-Vlanif100] quit
```

   # 配置RouterD。

```
[RouterD] interface Vlanif100
[RouterD-Vlanif100] ip address 192.168.255.2 255.255.255.0
[RouterD-Vlanif100] vrrp vrid 1 virtual-ip 192.168.255.254
[RouterD-Vlanif100] quit
```

6. 在源接口为Loopback接口的内层Ethernet Over GRE隧道上配置重定向多发选收功能，并指定链路组不根据链路状态刷新选路信息，避免路由切换过程中出现的丢包现象，最大程度保证业务连续性。

   # 配置RouterA。

```
[RouterA] replication path-group 1
[RouterA-replication-path-group-1] path Tunnel0/0/0 priority 1 track bfd tohub
[RouterA-replication-path-group-1] path Tunnel0/0/1 priority 2 track bfd tohub
[RouterA-replication-path-group-1] path Tunnel0/0/2 priority 3
[RouterA-replication-path-group-1] path Tunnel0/0/3 priority 4
[RouterA-replication-path-group-1] quit
[RouterA] interface tunnel 0/0/4
[RouterA-Tunnel0/0/4] redirect-replication path-group 1
[RouterA-Tunnel0/0/4] quit
[RouterA] replication if-down-delay 65535
```

   # 配置RouterC。

```
[RouterC] replication path-group 1
[RouterC-replication-path-group-1] path Tunnel 0/0/0 priority 1
[RouterC-replication-path-group-1] path Tunnel 0/0/1 priority 2
[RouterC-replication-path-group-1] quit
[RouterC] interface tunnel0/0/2
[RouterC-Tunnel0/0/2] redirect-replication path-group 1
[RouterC-Tunnel0/0/2] quit
[RouterC] replication if-down-delay 65535
```

   # 配置RouterD。

```
[RouterD] replication path-group 1
[RouterD-replication-path-group-1] path Tunnel 0/0/0 priority 1
[RouterD-replication-path-group-1] path Tunnel 0/0/1 priority 2
[RouterD-replication-path-group-1] quit
[RouterD] interface tunnel0/0/2
[RouterD-Tunnel0/0/2] redirect-replication path-group 1
[RouterD-Tunnel0/0/2] quit
[RouterD] replication if-down-delay 65535
```

配置完成后，执行**display replication path-group**命令可以看到链路组的所有链路状态和选路结果。以RouterA的显示为例。

```
[RouterA] display replication path-group 1
-----------------------------------------------------------
Path member        Priority      Track info      Path state
Tunnel0/0/0        1             BFD             UP
Tunnel0/0/1        2             BFD             UP
Tunnel0/0/2        3             -               UP
Tunnel0/0/3        4             -               UP
-----------------------------------------------------------
[RouterA] display replication path-group
-------------------------------------------------------------------------------
Group name                        Replication link1     Replication link2
1                              Tunnel0/0/0           Tunnel0/0/1
-------------------------------------------------------------------------------
```

7. 配置设备间使用OSPF路由，且使能OSPF BFD检测机制，当链路出现故障时，BFD能够快速检测到故障并通告给OSPF协议，使业务流量使用备份链路传送。

   # 配置RouterA。

```
[RouterA] ospf 1
[RouterA-ospf-1] bfd all-interfaces enable
[RouterA-ospf-1] bfd all-interfaces min-tx-interval 50 min-rx-interval 50
[RouterA-ospf-1] filter-policy ip-prefix fromhub import
[RouterA-ospf-1] area 0.0.0.0
[RouterA-ospf-1-area-0.0.0.0] network 1.1.1.1 0.0.0.0
[RouterA-ospf-1-area-0.0.0.0] quit
[RouterA-ospf-1] quit
[RouterA] ip ip-prefix fromhub index 10 permit 192.168.255.254 32
```

   # 配置RouterC。

```
[RouterC] ospf 1
[RouterC-ospf-1] bfd all-interfaces enable
[RouterC-ospf-1] bfd all-interfaces min-tx-interval 50 min-rx-interval 50
[RouterC-ospf-1] filter-policy ip-prefix fromspoke import
[RouterC-ospf-1] import-route direct route-policy tospoke
[RouterC-ospf-1] area 0.0.0.0
[RouterC-ospf-1-area-0.0.0.0] quit
[RouterC-ospf-1] quit
[RouterC] route-policy tospoke permit node 0
[RouterC-route-policy] if-match ip-prefix tospoke
[RouterC-route-policy] quit
[RouterC] ip ip-prefix fromspoke index 10 permit 1.1.1.1 32
[RouterC] ip ip-prefix tospoke index 10 permit 192.168.255.254 32
```

   # 配置RouterD。

```
[RouterD] ospf 1
[RouterD-ospf-1] bfd all-interfaces enable
[RouterD-ospf-1] bfd all-interfaces min-tx-interval 50 min-rx-interval 50
[RouterD-ospf-1] filter-policy ip-prefix fromspoke import
[RouterD-ospf-1] import-route direct route-policy tospoke
[RouterD-ospf-1] area 0.0.0.0
[RouterD-ospf-1-area-0.0.0.0] quit
[RouterD-ospf-1] quit
[RouterD] route-policy tospoke permit node 0
[RouterD-route-policy] if-match ip-prefix tospoke
[RouterD-route-policy] quit
[RouterD] ip ip-prefix fromspoke index 10 permit 1.1.1.1 32
[RouterD] ip ip-prefix tospoke index 10 permit 192.168.255.254 32
```

配置文件

- RouterA的配置文件

```
#
sysname RouterA
#
router id 1.1.1.1
#
vlan batch 100 200
#
 replication if-down-delay 65535
#
ip vpn-instance wan1
 ipv4-family
  route-distinguisher 192.168.10.1:0
#
ip vpn-instance wan2
 ipv4-family
  route-distinguisher 192.168.20.1:0
#
bfd
#
interface GigabitEthernet0/0/1
 undo portswitch
 tcp adjust-mss 1200
 map interface Virtual-Ethernet0/0/0
#
interface GigabitEthernet0/0/8
 ip binding vpn-instance wan1
 ip address 192.168.10.1 255.255.255.0
#
interface GigabitEthernet0/0/9
 ip binding vpn-instance wan2
 ip address 192.168.20.1 255.255.255.0
#
interface Virtual-Ethernet0/0/0
 portswitch
 port link-type access
 port default vlan 200
#
interface Virtual-Ethernet0/0/1
 portswitch
 port link-type trunk
 undo port trunk allow-pass vlan 1
 port trunk allow-pass vlan 200
#
interface LoopBack0
 ip address 1.1.1.1 255.255.255.0
#
interface Tunnel0/0/0
 description key1
 ip address 172.16.1.1 255.255.255.0
 tunnel-protocol gre
 keepalive period 1
 gre key plain 1
 source GigabitEthernet0/0/8
 destination vpn-instance wan1 10.172.10.2
 ospf enable 1 area 0.0.0.0
#
interface Tunnel0/0/1
 description key2
 ip address 172.16.2.1 255.255.255.0
 tunnel-protocol gre
 keepalive period 1
 gre key plain 2
 source GigabitEthernet0/0/9
 destination vpn-instance wan2 10.172.10.2
 ospf enable 1 area 0.0.0.0
#
```

```
interface Tunnel0/0/2
 ip address 172.16.3.1 255.255.255.0
 tunnel-protocol gre
 gre key plain 3
 source GigabitEthernet0/0/8
 destination vpn-instance wan1 10.172.20.2
 ospf enable 1 area 0.0.0.0
#
interface Tunnel0/0/3
 ip address 172.16.4.1 255.255.255.0
 tunnel-protocol gre
 gre key plain 4
 source GigabitEthernet0/0/9
 destination vpn-instance wan2 10.172.20.2
 ospf enable 1 area 0.0.0.0
#
interface Tunnel0/0/4
 ip address 172.16.5.1 255.255.255.0
 tunnel-protocol gre
 gre key plain 5
 source LoopBack0
 destination 192.168.255.254
 redirect-replication path-group 1
 map interface Virtual-Ethernet0/0/1
#
bfd 1 bind peer-ip 172.16.1.2 source-ip 172.16.1.1
 discriminator local 1
 discriminator remote 2
 commit
#
bfd 2 bind peer-ip 172.16.2.2 source-ip 172.16.2.1
 discriminator local 3
 discriminator remote 4
 commit
#
bfd tohub bind peer-ip 192.168.255.254 source-ip
1.1.1.1
 discriminator local 5
 discriminator remote 6
 commit
#
ospf 1
 bfd all-interfaces enable
 bfd all-interfaces min-tx-interval 50 min-rx-interval 50
 filter-policy ip-prefix fromhub import
 area 0.0.0.0
  network 1.1.1.1 0.0.0.0
#
ip ip-prefix fromhub index 10 permit 192.168.255.254 32
#
ip route-static vpn-instance wan1 10.172.0.0 255.255.0.0 192.168.10.254
ip route-static vpn-instance wan2 10.172.0.0 255.255.0.0 192.168.20.254
#
replication path-group 1
 path Tunnel0/0/0 priority 1 track bfd tohub
 path Tunnel0/0/1 priority 2 track bfd tohub
 path Tunnel0/0/2 priority 3
 path Tunnel0/0/3 priority 4
#
```

- RouterC的配置文件

```
#
sysname RouterC
#
router id 10.172.10.2
#
vlan batch 100 200
#
stp mode rstp
stp instance 0 root primary
```

```
stp pathcost-standard legacy
#
 replication if-down-delay 65535
#
bfd
#
interface Vlanif100
 ip address 192.168.255.1 255.255.255.0
 vrrp vrid 1 virtual-ip 192.168.255.254
 vrrp vrid 1 priority 120
 vrrp vrid 1 track bfd-session 2 reduced 15
 vrrp vrid 1 track bfd-session 4 reduced 15
 vrrp vrid 1 track interface XGigabitEthernet0/0/0 reduced 30
#
interface Vlanif200
 map interface Virtual-Ethernet0/0/0
#
interface Eth-Trunk0
 port link-type trunk
 undo port trunk allow-pass vlan 1
 port trunk allow-pass vlan 100 200
#
interface GigabitEthernet0/0/0
 portswitch
 eth-trunk 0
#
interface GigabitEthernet0/0/1
 portswitch
 eth-trunk 0
#
interface XGigabitEthernet0/0/0
 ip address 10.172.10.2 255.255.255.0
#
interface XGigabitEthernet0/0/1
 portswitch
 port link-type trunk
 undo port trunk allow-pass vlan 1
 port trunk allow-pass vlan 100 200
 stp root-protection
#
interface Virtual-Ethernet0/0/0
 portswitch
 port link-type trunk
 undo port trunk allow-pass vlan 1
 port trunk allow-pass vlan 200
#
interface Virtual-Ethernet0/0/1
 portswitch
 port link-type trunk
 undo port trunk allow-pass vlan 1
 port trunk allow-pass vlan 200
#
interface Tunnel0/0/0
 description key1
 ip address 172.16.1.2 255.255.255.0
 tunnel-protocol gre
 gre key plain 1
 source XGigabitEthernet0/0/0
 destination 192.168.10.1
 ospf enable 1 area 0.0.0.0
#
interface Tunnel0/0/1
 description key2
 ip address 172.16.2.2 255.255.255.0
 tunnel-protocol gre
 gre key plain 2
 source XGigabitEthernet0/0/0
 destination 192.168.20.1
 ospf enable 1 area 0.0.0.0
```

```
#
interface Tunnel0/0/2
 ip address 172.16.5.2 255.255.255.0
 tunnel-protocol gre
 gre key plain 5
 source 192.168.255.254
 destination 1.1.1.1
 redirect-replication path-group 1
 map interface Virtual-Ethernet0/0/1
#
bfd 1 bind peer-ip 172.16.1.1 source-ip 172.16.1.2
 discriminator local 2
 discriminator remote 1
 description 1
 commit
#
bfd 2 bind peer-ip 172.16.2.1 source-ip 172.16.2.2
 discriminator local 4
 discriminator remote 3
 commit
#
bfd tospoke bind peer-ip 1.1.1.1 source-ip
192.168.255.254
 discriminator local 6
 discriminator remote 5
 commit
#
ospf 1
 bfd all-interfaces enable
 bfd all-interfaces min-tx-interval 50 min-rx-interval 50
 filter-policy ip-prefix fromspoke import
 import-route direct route-policy tospoke
 area 0.0.0.0
#
route-policy tospoke permit node 0
 if-match ip-prefix tospoke
#
ip ip-prefix fromspoke index 10 permit 1.1.1.1 32
ip ip-prefix tospoke index 10 permit 192.168.255.254 32
#
ip route-static 192.168.0.0 255.255.0.0 10.172.10.1
#
replication path-group 1
 path Tunnel0/0/0 priority 1
 path Tunnel0/0/1 priority 2
#
```

- RouterD的配置文件

```
#
sysname RouterD
#
router id 10.172.20.2
#
vlan batch 100 200
#
stp mode rstp
stp pathcost-standard legacy
#
 replication if-down-delay 65535
#
interface Vlanif100
 ip address 192.168.255.2 255.255.255.0
 vrrp vrid 1 virtual-ip 192.168.255.254
#
interface Vlanif200
 map interface Virtual-Ethernet0/0/0
#
interface Eth-Trunk0
 port link-type trunk
 undo port trunk allow-pass vlan 1
```

```
 port trunk allow-pass vlan 100 200
#
interface GigabitEthernet0/0/1
 portswitch
 eth-trunk 0
#
interface GigabitEthernet0/0/2
 portswitch
 eth-trunk 0
#
interface GigabitEthernet0/0/4
 portswitch
 port link-type trunk
 port trunk allow-pass vlan 100 200
#
interface XGigabitEthernet0/0/0
 ip address 10.172.20.2 255.255.255.0
#
interface Virtual-Ethernet0/0/0
 portswitch
 port link-type trunk
 undo port trunk allow-pass vlan 1
 port trunk allow-pass vlan 200
#
interface Virtual-Ethernet0/0/1
 portswitch
 port link-type trunk
 undo port trunk allow-pass vlan 1
 port trunk allow-pass vlan 200
#
interface Tunnel0/0/0
 ip address 172.16.3.2 255.255.255.0
 tunnel-protocol gre
 gre key plain 3
 source XGigabitEthernet0/0/0
 destination 192.168.10.1
 ospf enable 1 area 0.0.0.0
 replication path-group 1
#
interface Tunnel0/0/1
 ip address 172.16.4.2 255.255.255.0
 tunnel-protocol gre
 gre key plain 4
 source XGigabitEthernet0/0/0
 destination 192.168.20.1
 ospf enable 1 area 0.0.0.0
#
interface Tunnel0/0/2
 ip address 172.16.5.2 255.255.255.0
 tunnel-protocol gre
 gre key plain 5
 source 192.168.255.254
 destination 1.1.1.1
 redirect-replication path-group 1
 map interface Virtual-Ethernet0/0/1
#
ospf 1
 bfd all-interfaces enable
 bfd all-interfaces min-tx-interval 50 min-rx-interval 50
 filter-policy ip-prefix fromspoke import
 import-route direct route-policy tospoke
 area 0.0.0.0
#
route-policy tospoke permit node 0
 if-match ip-prefix tospoke
#
ip ip-prefix fromspoke index 10 permit 1.1.1.1 32
ip ip-prefix tospoke index 10 permit 192.168.255.254 32
#
```

```
ip route-static 192.168.0.0 255.255.0.0 10.172.20.1
#
replication path-group 1
 path Tunnel0/0/0 priority 1
 path Tunnel0/0/1 priority 2
#
```

- RouterE的配置文件

```
#
sysname RouterE
#
stp mode rstp
stp pathcost-standard legacy
#
interface GigabitEthernet0/0/0
 description lan
 port link-type trunk
 undo port trunk allow-pass vlan 1
 port trunk allow-pass vlan 200
 stp disable
#
interface GigabitEthernet0/0/1
 port link-type trunk
 undo port trunk allow-pass vlan 1
 port trunk allow-pass vlan 100
200
#
interface GigabitEthernet0/0/2
 port link-type trunk
 undo port trunk allow-pass vlan 1
 port trunk allow-pass vlan 100
200
#
```

7.3 5G 冗余保护场景

7.3.1 配置企业使用 5G 主备双 SIM 卡上网示例

场景介绍

提高5G链路的可靠性有多种方式，例如5G双上行、5G+有线双上行等，其中双SIM卡主备也是比较简单且常用的一种。特别是对于一些单5G链路上行场景，可以通过在AR1上插入2个SIM卡来提高5G链路的可靠性。2个SIM卡通常分属于不同的运营商，防止某一个运营商无线侧发生故障后，整条5G链路断掉。同时，还可以配置SIM卡切换策略，当主SIM卡费用不足、或运营商无线链路故障导致5G拨号失败时，流量可以自动切换到备份SIM卡上转发，保证业务的快速恢复。目前双SIM卡备份场景下切换的时间为分钟级。

组网方式

如图1所示，企业分支和总部之间通过Internet网络互联。企业分支使用AR1企业路由器作为出口网关。为了提高链路可靠性，AR1企业路由器上插了两张不同运营商的5G SIM卡。两张SIM卡关联到不同优先级的APN模板，关联主SIM卡的APN模板的优先级高于关联备SIM卡的APN模板的优先级，并使能NQA探测功能。当主SIM卡所在的链路NQA探测失败时，5G链路切换到备SIM卡上重新拨号连接。

图 7-15 配置企业使用 5G 主备双 SIM 卡上网组网图

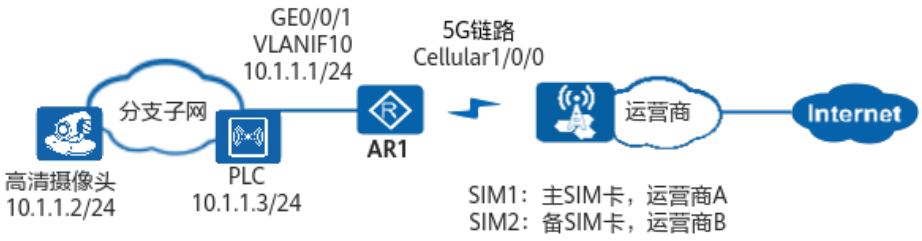

数据准备

表 7-19 数据准备表

项目	数据	说明
运营商给分支分配的APN名称	主SIM1卡：运营商A、5gneta 备SIM2卡：运营商B、5gnetb	APN名称需提前从运营商处获取。
运营商给分支5G Cellular接口分配的IP地址	运营商A：1.1.1.1/32 运营商B：2.2.2.2/32	5G Cellular接口拨号接入运营商后，运营商给5G Cellular接口自动分配的IP地址。
分支AR1 LAN侧接口信息	所属VLAN：10 网关地址：VLANIF10（10.1.1.1/24） LAN侧物理接口：GE0/0/1	VLAN 10为分支子网用户所在的VLAN，且分支子网用户的网关为VLANIF10接口。
NQA探测的目的地址	公网DNS服务器地址：114.114.114.114	NQA测试例的测试类型必须为ICMP测试，且到NQA测试例的目的地址必须路由可达。本例中选择公网的DNS服务器地址为探测目的地址，也可以选择其他路由可达的公网地址。 114.114.114.114是国内通用的DNS地址，国内用户使用较多，本例中用该地址来测试5G链路的连通性。8.8.8.8是全球通用的DNS地址，如果是国外用户，可以用8.8.8.8地址来测试5G链路的连通性。

配置思路

1. 配置5G Cellular接口的连接参数及NQA测试例，实现5G Cellular接口接入5G网络。
2. 配置分支企业子网，为内部用户自动分配IP地址。

3. 配置分支NAT功能，实现分支的内部用户可以访问Internet。
4. 配置静态路由，使企业分支和Internet之间的路由互通。

说明

在5G Cellular接口下执行命令**dialer enable-circular**配置轮询拨号功能时，设备会同时下发自动拨号、IP地址协商和5G Modem自愈的相关配置，无需再重复配置。

操作步骤

1. 配置5G Cellular接口的连接参数及NQA测试例，实现5G Cellular接口接入5G网络。
   a. 创建APN模板。
   ```
   <Huawei> system-view
   [Huawei] sysname AR1
   [AR1] apn profile 5gprofilea
   [AR1-apn-profile-5gprofilea] apn 5gneta
   [AR1-apn-profile-5gprofilea] quit
   [AR1] apn profile 5gprofileb
   [AR1-apn-profile-5gprofileb] apn 5gnetb
   [AR1-apn-profile-5gprofileb] sim-id 2
   [AR1-apn-profile-5gprofileb] quit
   ```
   b. 使能轮询DCC功能，配置自动拨号连接。
   ```
   [AR1] interface Cellular 1/0/0
   [AR1-Cellular1/0/0] dialer enable-circular
   [AR1-Cellular1/0/0] quit
   ```
   c. 配置NQA功能，探测5G主SIM卡对应链路的连通性。
   ```
   [AR1] nqa test-instance user test
   [AR1-nqa-user-test] test-type icmp
   [AR1-nqa-user-test] frequency 30
   [AR1-nqa-user-test] destination-address ipv4 114.114.114.114
   [AR1-nqa-user-test] start now
   [AR1-nqa-user-test] quit
   ```
   d. 在5G Cellular接口上绑定APN模板，同时绑定NQA测试例。
   ```
   [AR1-Cellular1/0/0] apn-profile 5gprofilea priority 120 track nqa user test
   Info: The configuration will become effective after link reset.
   [AR1-Cellular1/0/0] apn-profile 5gprofileb priority 110
   Info: The configuration will become effective after link reset.
   [AR1-Cellular1/0/0] shutdown
   [AR1-Cellular1/0/0] undo shutdown
   [AR1-Cellular1/0/0] quit
   ```
2. 配置企业分支子网，为内部用户自动分配IP地址。创建VLAN10，将GE0/0/1接口加入VLAN10，并配置DHCP功能。
   ```
   [AR1] vlan 10
   [AR1-vlan10] quit
   [AR1] interface GigabitEthernet 0/0/1
   [AR1-GigabitEthernet0/0/1] port link-type access
   [AR1-GigabitEthernet0/0/1] port default vlan 10
   [AR1-GigabitEthernet0/0/1] quit
   [AR1] dhcp enable
   [AR1] interface Vlanif 10
   [AR1-Vlanif10] ip address 10.1.1.1 24
   [AR1-Vlanif10] dhcp select interface
   [AR1-Vlanif10] quit
   ```
3. 配置分支NAT功能。
   ```
   [AR1] acl number 3000
   [AR1-acl-adv-3000] rule 5 permit ip
   [AR1-acl-adv-3000] quit
   [AR1] interface Cellular 1/0/0
   [AR1-Cellular1/0/0] nat outbound 3000
   [AR1-Cellular1/0/0] quit
   ```

4. 配置静态路由，出接口为5G Cellular1/0/0，使企业分支和Internet之间的路由互通。

```
[AR1] ip route-static 0.0.0.0 0.0.0.0 Cellular 1/0/0
[AR1] quit
```

验证

1. 在AR1上执行命令**display ip interface brief Cellular 1/0/0**，查看Cellular1/0/0接口获取到的IP地址。

```
<AR1> display ip interface brief Cellular 1/0/0
*down: administratively down
^down: standby
(l): loopback
(s): spoofing
(E): E-Trunk down
Interface                         IP Address/Mask      Physical   Protocol

Cellular1/0/0                      1.1.1.1/32          up         up
```

2. 在AR1上执行命令**display Cellular 1/0/0 all**，查看Cellular1/0/0接口的状态信息。

```
<AR1> display Cellular 1/0/0 all
Modem State:
Hardware Information.
=====================
Model = RG801
Modem Type = 5G module
Modem Firmware Version = RG801HEAAAR01A07M8G
Hardware Version = HiB5000_MODEM Ver.A
Integrate circuit card identity (ICCID) = 98681020100202000069
International Mobile Subscriber Identity (IMSI) = 460070075591996
Mobile Station International ISDN Number (MSISDN) = None
International Mobile Equipment Identity (IMEI) = 867147050004457
Factory Serial Number (FSN) = 0123456789ABCDEF
Modem Status = Online
Profile Information.
====================
Profile 1
--------
PDP Type = IPv4, Header Compression = OFF
Data Compression = OFF
Access Point Name (APN) = 5gneta
Packet Session Status = Active
* - Default profile
Network Information.
====================
Current Service Status = Service available
Service Domain = Combined
Current Service = PS
Packet Service = Attached
Packet Session Status = Active
Current Roaming Status = Roaming
Network Selection Mode = Automatic
Network Connection Mode = Automatic
Current Network Connection = 5G(NSA)
Mobile Country Code (MCC) = 369
Mobile Network Code (MNC) = 77
Mobile Operator Information = Unknown
Tracking Area Code (TAC) = 1002
Cell ID = 9881858
Radio Information.
==================
Current Bands : AUTO
LTE:
Current Band = B3
Current RSSI >= -51 dBm
Current RSRP = -71 dBm (strong)
Current RSRQ = -6 dB
```

```
Current SINR = 14 dB
NR:
Current Band = N78
Current RSRP = -65 dBm (strong)
Current RSRQ = -10 dB
Current SINR = 36 dB
Bands supported :
  WCDMA: WCDMA850 WCDMA900 WCDMA2100
  FDD LTE: B1 B3 B5 B7 B8 B20 B28
  TDD LTE: B34 B38 B39 B40 B41
  FDD NR: N1 N3 N28
  TDD NR: N41 N77 N78 N79
  SUL NR: N80
Modem Security Information.
===========================
SIM ID = 1
PIN Verification = Disabled
PIN Status = Ready
Number of Retries remaining = 3
SIM Status = OK
```

3. 当主SIM卡故障时，执行命令**display ip interface brief Cellular 1/0/0**，查看Cellular1/0/0接口可以获取到运营商B分配的IP地址。

```
<AR1> display ip interface brief Cellular 1/0/0
*down: administratively down
^down: standby
(l): loopback
(s): spoofing
(E): E-Trunk down
Interface                    IP Address/Mask      Physical   Protocol

Cellular1/0/0                  2.2.2.2/32          up         up
```

配置文件

AR1配置文件

```
#
 sysname AR1
#
vlan batch 10
#
dhcp enable
#
acl number 3000
 rule 5 permit ip
#
interface Vlanif10
 ip address 10.1.1.1 255.255.255.0
 dhcp select interface
#
interface GigabitEthernet0/0/1
 port link-type access
 port default vlan 10
#
interface Cellular1/0/0
 dialer enable-circular
 apn-profile 5gprofilea priority 120 track nqa user test
 apn-profile 5gprofileb priority 110
 dialer timer autodial 10
 nat outbound 3000
 modem auto-recovery dial action modem-reboot fail-times 128
 modem auto-recovery icmp-unreachable action modem-reboot
 modem auto-recovery services-unavailable action modem-reboot test-times 0 interval 3600
 ip address negotiate
#
apn profile 5gprofilea
 apn 5gneta
apn profile 5gprofileb
 apn 5gnetb
```

```
 sim-id 2
#
ip route-static 0.0.0.0 0.0.0.0 Cellular1/0/0
#
nqa test-instance user test
 test-type icmp
 destination-address ipv4 114.114.114.114
 frequency 30
 start now
#
return
```

7.3.2 配置企业使用有线和 5G 主备双链路上网示例

场景介绍

典型的企业分支通常还是采用有线链路作为主链路，例如以太链路、MPLS专线等。为了提升分支站点的可靠性，企业一般都会部署两条上行链路，一条为主链路，一条为备链路。如果两条上行链路都采用有线，成本会比较高，因为要租用两条专线。因此，在5G链路出现以前，一般使用有线链路为主链路，4G无线链路作为备份链路。5G链路出现以后，由于5G链路开通快、带宽大、成本低等优点，企业可以选择使用5G链路作为有线链路的备份链路。

组网方式

如图1所示，企业分支和总部之间通过Internet网络互通，企业分支使用AR1企业路由器作为出口网关。为了提高链路可靠性，AR1企业路由器部署了两条上行链路接入Internet。其中以太有线链路作为主链路，5G无线链路作为备链路。

图 7-16 配置企业使用有线和 5G 主备双链路上网组网图

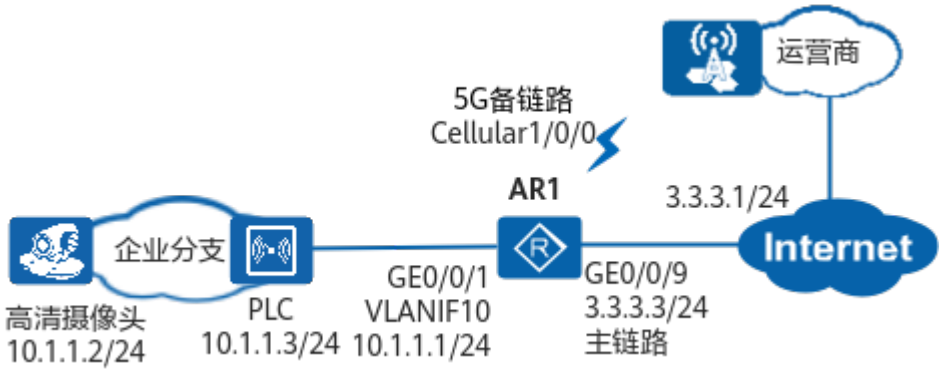

数据准备

表 7-20 数据准备表

项目	数据	说明
运营商给分支分配的APN名称	5gnet	APN名称需提前从运营商处获取。

项目	数据	说明
运营商给分支5G Cellular接口分配的IP地址	1.1.1.1/32	5G Cellular接口拨号接入运营商后，运营商给5G Cellular接口自动分配的IP地址。
运营商给分支GE0/0/9接口分配的IP地址	3.3.3.3/24	分支AR1的主链路为以太链路，接口GE0/0/9通过静态方式配置IP地址。分支用户优先通过该链路接入Internet。
运营商对接分支GE0/0/9接口的IP地址	3.3.3.1/24	运营商对接分支GE0/0/9接口的IP地址用于配置路由信息，使分支和Internet之间的路由互通。
分支AR1 LAN侧接口信息	所属VLAN：10 网关地址：VLANIF10（10.1.1.1/24） LAN侧物理接口：GE0/0/1	VLAN 10为分支子网用户所在的VLAN，且分支子网用户的网关为VLANIF10接口。

配置思路

1. 配置5G Cellular接口的连接参数，实现5G Cellular接口接入5G网络。
2. 配置企业子网，为内部用户自动分配IP地址。
3. 配置分支NAT功能，实现分支的内部用户可以访问Internet。
4. 配置静态路由，使有线链路的优先级高于5G无线链路。当有线主链路故障后，流量可以快速切换到5G备链路上转发。

说明

在5G Cellular接口下执行命令**dialer enable-circular**配置轮询拨号功能时，设备会同时下发自动拨号、IP地址协商和5G Modem自愈的相关配置，无需再重复配置。

操作步骤

1. 配置5G Cellular接口的连接参数，实现5G Cellular接口接入5G网络。
   a. 创建APN模板。
   ```
   <Huawei> system-view
   [Huawei] sysname AR1
   [AR1] apn profile 5gprofile
   [AR1-apn-profile-5gprofile] apn 5gnet
   [AR1-apn-profile-5gprofile] quit
   ```
   b. 使能轮询DCC功能
   ```
   [AR1] interface Cellular 1/0/0
   [AR1-Cellular1/0/0] dialer enable-circular
   ```
   c. 在5G Cellular接口上绑定APN模板。
   ```
   [AR1-Cellular1/0/0] apn-profile 5gprofile
   Info: The configuration will become effective after link reset.
   [AR1-Cellular1/0/0] shutdown
   [AR1-Cellular1/0/0] undo shutdown
   [AR1-Cellular1/0/0] quit
   ```
2. 配置分支子网，创建VLAN10，将GE0/0/1接口加入VLAN10，并配置DHCP功能。

```
[AR1] vlan 10
[AR1-vlan10] quit
[AR1] interface GigabitEthernet 0/0/1
[AR1-GigabitEthernet0/0/1] port link-type access
[AR1-GigabitEthernet0/0/1] port default vlan 10
[AR1-GigabitEthernet0/0/1] quit
[AR1] dhcp enable
[AR1] interface Vlanif 10
[AR1-Vlanif10] ip address 10.1.1.1 24
[AR1-Vlanif10] dhcp select interface
[AR1-Vlanif10] quit
```

3. 配置分支WAN侧接口GE0/0/9的IP地址。

```
[AR1] interface GigabitEthernet 0/0/9
[AR1-GigabitEthernet0/0/9] ip address 3.3.3.3 24
[AR1-GigabitEthernet0/0/9] quit
```

4. 配置分支NAT功能。

```
[AR1] acl number 3000
[AR1-acl-adv-3000] rule 5 permit ip
[AR1-acl-adv-3000] quit
[AR1] interface Cellular 1/0/0
[AR1-Cellular1/0/0] nat outbound 3000
[AR1-Cellular1/0/0] quit
[AR1] interface GigabitEthernet 0/0/9
[AR1-GigabitEthernet0/0/9] nat outbound 3000
[AR1-GigabitEthernet0/0/9] quit
```

5. 配置两条分支缺省路由，有线链路路由优先级高，5G链路路由优先级低。

```
[AR1] ip route-static 0.0.0.0 0 Cellular 1/0/0
[AR1] ip route-static 0.0.0.0 0.0.0.0 3.3.3.1 preference 30
[AR1] quit
```

验证

1. 在AR1上执行命令**display ip interface brief Cellular 1/0/0**，查看Cellular1/0/0接口获取到的IP地址。

```
<AR1> display ip interface brief Cellular 1/0/0
*down: administratively down
^down: standby
(l): loopback
(s): spoofing
(E): E-Trunk down
Interface                    IP Address/Mask      Physical   Protocol

Cellular1/0/0                 1.1.1.1/32          up         up
```

2. 在AR1上执行命令**display Cellular 1/0/0 all**，查看Cellular1/0/0接口的状态信息。

```
<AR1> display Cellular 1/0/0 all
Modem State:
Hardware Information.
=====================
Model = RG801
Modem Type = 5G module
Modem Firmware Version = RG801HEAAAR01A07M8G
Hardware Version = HiB5000_MODEM Ver.A
Integrate circuit card identity (ICCID) = 98681020100202000069
International Mobile Subscriber Identity (IMSI) = 460070075591996
Mobile Station International ISDN Number (MSISDN) = None
International Mobile Equipment Identity (IMEI) = 867147050004457
Factory Serial Number (FSN) = 0123456789ABCDEF
Modem Status = Online
Profile Information.
====================
Profile 1
--------
PDP Type = IPv4, Header Compression = OFF
Data Compression = OFF
```

```
Access Point Name (APN) = 5gnet
Packet Session Status = Active
* - Default profile
Network Information.
====================
Current Service Status = Service available
Service Domain = Combined
Current Service = PS
Packet Service = Attached
Packet Session Status = Active
Current Roaming Status = Roaming
Network Selection Mode = Automatic
Network Connection Mode = LTE-NR
Current Network Connection = 5G(NSA)
Mobile Country Code (MCC) = 369
Mobile Network Code (MNC) = 77
Mobile Operator Information = Unknown
Tracking Area Code (TAC) = 1002
Cell ID = 9881858
Radio Information.
==================
Current Bands :
  WCDMA: AUTO
  LTE: B3
  NR: AUTO
LTE:
Current Band = B3
Current RSSI >= -51 dBm
Current RSRP = -71 dBm (strong)
Current RSRQ = -6 dB
Current SINR = 6 dB
NR:
Current Band = N78
Current RSRP = -65 dBm (strong)
Current RSRQ = -10 dB
Current SINR = 38 dB
Bands supported :
  WCDMA: WCDMA850 WCDMA900 WCDMA2100
  FDD LTE: B1 B3 B5 B7 B8 B20 B28
  TDD LTE: B34 B38 B39 B40 B41
  FDD NR: N1 N3 N28
  TDD NR: N41 N77 N78 N79
Modem Security Information.
===========================
SIM ID = 1
PIN Verification = Disabled
PIN Status = Ready
Number of Retries remaining = 3
SIM Status = OK
```

3. 在AR1的GE0/0/9接口上执行命令**shutdown**，模拟以太主链路故障。

```
<AR1> system-view
[AR1] interface GigabitEthernet 0/0/9
[AR1-GigabitEthernet0/0/9] shutdown
[AR1-GigabitEthernet0/0/9] quit
[AR1] quit
```

4. 在AR1上执行命令**ping -a 10.1.1.1 10.2.1.1**，模拟分支用户访问总部用户的流量，流量能Ping通。

```
<AR1> ping -a 10.1.1.1 10.2.1.1
  PING 10.2.1.1: 56  data bytes, press CTRL_C to break
    Reply from 10.2.1.1: bytes=56 Sequence=1 ttl=255 time=51 ms
    Reply from 10.2.1.1: bytes=56 Sequence=2 ttl=255 time=35 ms
    Reply from 10.2.1.1: bytes=56 Sequence=3 ttl=255 time=45 ms
    Reply from 10.2.1.1: bytes=56 Sequence=4 ttl=255 time=40 ms
    Reply from 10.2.1.1: bytes=56 Sequence=5 ttl=255 time=37 ms

  --- 10.2.1.1 ping statistics ---
    5 packet(s) transmitted
    5 packet(s) received
```

```
0.00% packet loss
round-trip min/avg/max = 35/41/51 ms
```

配置文件

AR1配置文件

```
#
 sysname AR1
#
vlan batch 10
#
dhcp enable
#
acl number 3000
 rule 5 permit ip
#
interface Vlanif10
 ip address 10.1.1.1 255.255.255.0
 dhcp select interface
#
interface GigabitEthernet0/0/1
 port link-type access
 port default vlan 10
#
interface GigabitEthernet0/0/9
 ip address 3.3.3.3 255.255.255.0
 nat outbound 3000
#
interface Cellular1/0/0
 dialer enable-circular
 apn-profile 5gprofile
 dialer timer autodial 10
 nat outbound 3000
 modem auto-recovery dial action modem-reboot fail-times 128
 modem auto-recovery icmp-unreachable action modem-reboot
 modem auto-recovery services-unavailable action modem-reboot test-times 0 interval 3600
 ip address negotiate
#
apn profile 5gprofile
 apn 5gnet
#
ip route-static 0.0.0.0 0.0.0.0 Cellular1/0/0
ip route-static 0.0.0.0 0.0.0.0 3.3.3.1 preference 30
#
return
```

7.3.3 配置分支使用 5G 双链路和总部建立 GRE 主备隧道互联示例

场景介绍

可靠性是企业组网中必须考虑的一个重要因素，特别是对于那些大型企业，业务一旦中断，可能会损失惨重。为了增强企业分支接入Internet的可靠性，分支与总部互联时一般都会部署两条广域上行链路，一条为主链路，一条为备链路。当主链路发生故障后，流量可以切换到备链路上转发，保证业务的连续性。在某些场景，不仅需要高可靠性，还需要链路之间可以快速切换。例如工业控制场景，需要亚秒级甚至毫秒级的切换。还有一些场景，对上行带宽的要求比较高，例如视频监控回传场景。

为了满足这些多样化的需求，企业可以选择使用两条5G链路作为广域上行链路，并配置BFD功能。由于5G链路开通快、带宽大、成本低，加上BFD快速检测机制，当主链路发生故障时，业务可以立即切换到5G备份链路上转发，减少业务中断时间，提高网络的可靠性。

组网方式

如图1所示，企业分支和总部之间通过Internet网络互联。企业分支使用AR1企业路由器作为出口网关。为了提高链路可靠性，AR1企业路由器上插了两块5G单板，提供两条5G链路接入Internet。当企业分支和总部之间需要交互三层业务时，分支和总部之间要在两条5G链路上分别构建GRE隧道，通过配置不同的静态路由优先级实现业务主备。BFD检测并监控主GRE隧道的连通状态，实现分支及总部之间三层业务的快速收敛。

图 7-17 配置分支使用 5G 双链路和总部建立 GRE 主备隧道互联组网图

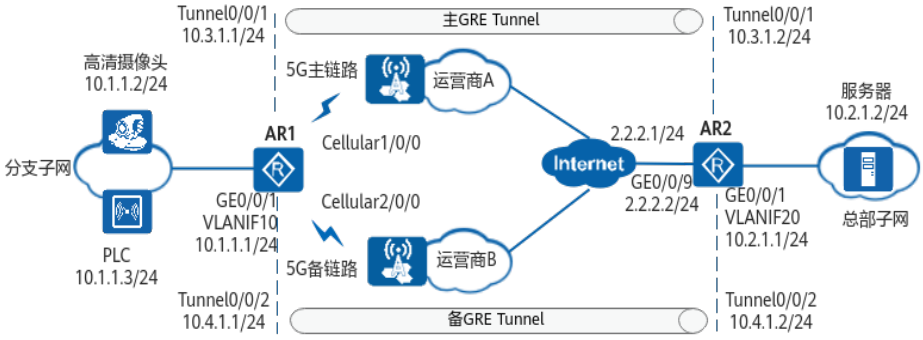

数据准备

表 7-21 数据准备表

项目	数据	说明
运营商A给分支分配的APN名称	5gneta	APN名称需提前从运营商处获取。
运营商B给分支分配的APN名称	5gnetb	
运营商A给分支主5G Cellular1/0/0接口分配的IP地址	1.1.1.1/32	5G Cellular接口拨号接入运营商后，运营商给5G Cellular接口自动分配的IP地址。 **说明** 使用GRE隧道时，要求运营商给5G Cellular接口分配的IP地址为固定IP地址。本例中，假设运营商为5G Cellular接口分配的固定IP地址为1.1.1.1和3.3.3.3。
运营商B给分支备5G Cellular2/0/0接口分配的IP地址	3.3.3.3/32	
运营商给总部GE0/0/9接口分配的IP地址	2.2.2.2/24	总部AR2通过有线的方式接入Internet，该有线接口GE0/0/9采用静态方式配置IP地址。
运营商对接总部GE0/0/9接口的IP地址	2.2.2.1/24	运营商对接总部AR2 GE0/0/9接口的IP地址用于配置路由信息，使总部和Internet之间的路由互通。
分支AR1主Tunnel0/0/1接口的IP地址	10.3.1.1/24	分支和总部主备GRE隧道的Tunnel接口地址。

项目	数据	说明
分支AR1备Tunnel0/0/2接口的IP地址	10.4.1.1/24	
总部AR2主Tunnel0/0/1接口的IP地址	10.3.1.2/24	
总部AR2备Tunnel0/0/2接口的IP地址	10.4.1.2/24	
分支AR1 LAN侧接口信息	所属VLAN：10 网关地址：VLANIF10（10.1.1.1/24） LAN侧物理接口：GE0/0/1	VLAN 10为分支子网用户所在的VLAN，且分支子网用户的网关为VLANIF10接口。
总部AR2 LAN侧接口信息	所属VLAN：20 网关地址：VLANIF20（10.2.1.1/24） LAN侧物理接口：GE0/0/1	VLAN 20为总部子网用户所在的VLAN，且总部子网用户的网关为VLANIF20接口。

TCP MSS 参数配置说明

为了减少网络传输中不必要的分片和重组，网络规划时需要合理设置终端发出的报文大小。对于TCP报文，可以配置5G AR设备的TCP MSS值，通过修改应用层报文数据包的长度来避免报文分片。在5G 2B专线场景中，TCP MSS取值比较简单，在隧道两端AR设备的LAN侧接入物理口或VLANIF口上配置TCP MSS为推荐值1200。

配置思路

1. 配置5G Cellular接口的连接参数，实现5G Cellular接口接入5G网络。
2. 配置企业子网，为内部用户自动分配IP地址。
3. 配置Tunnel接口，创建主备GRE隧道，使分支和总部之间的业务流量通过GRE隧道传输。
4. 配置BFD会话，探测分支和总部之间主GRE隧道的连通性。
5. 配置静态路由，使企业分支和总部子网的用户可以互通。

说明

在5G Cellular接口下执行命令**dialer enable-circular**配置轮询拨号功能时，设备会同时下发自动拨号、IP地址协商和5G Modem自愈的相关配置，无需再重复配置。

操作步骤

1. 配置5G Cellular接口的连接参数，实现5G Cellular接口接入5G网络。

   a. 创建APN模板。
   ```
   <Huawei> system-view
   [Huawei] sysname AR1
   [AR1] apn profile 5gprofilea
   [AR1-apn-profile-5gprofilea] apn 5gneta
   [AR1-apn-profile-5gprofilea] quit
   [AR1] apn profile 5gprofileb
   [AR1-apn-profile-5gprofileb] apn 5gnetb
   [AR1-apn-profile-5gprofileb] quit
   ```

   b. 使能轮询DCC功能，配置自动拨号连接。
   ```
   [AR1] interface Cellular 1/0/0
   [AR1-Cellular1/0/0] dialer enable-circular
   [AR1-Cellular1/0/0] quit
   [AR1] interface Cellular 2/0/0
   [AR1-Cellular2/0/0] dialer enable-circular
   [AR1-Cellular2/0/0] quit
   ```

   c. 在5G Cellular接口上绑定APN模板。
   ```
   [AR1] interface Cellular 1/0/0
   [AR1-Cellular1/0/0] apn-profile 5gprofilea
   Info: The configuration will become effective after link reset.
   [AR1-Cellular1/0/0] shutdown
   [AR1-Cellular1/0/0] undo shutdown
   [AR1-Cellular1/0/0] quit
   [AR1] interface Cellular 2/0/0
   [AR1-Cellular2/0/0] apn-profile 5gprofileb
   Info: The configuration will become effective after link reset.
   [AR1-Cellular2/0/0] shutdown
   [AR1-Cellular2/0/0] undo shutdown
   [AR1-Cellular2/0/0] quit
   ```

2. 配置企业子网，为内部用户自动分配IP地址。

   a. 配置分支子网，创建VLAN10，将GE0/0/1接口加入VLAN10。配置VLANIF 10接口TCP最大报文段长度为1200字节并配置DHCP功能。
   ```
   [AR1] vlan 10
   [AR1-vlan10] quit
   [AR1] interface GigabitEthernet 0/0/1
   [AR1-GigabitEthernet0/0/1] port link-type access
   [AR1-GigabitEthernet0/0/1] port default vlan 10
   [AR1-GigabitEthernet0/0/1] quit
   [AR1] dhcp enable
   [AR1] interface Vlanif 10
   [AR1-Vlanif10] ip address 10.1.1.1 24
   [AR1-Vlanif10] dhcp select interface
   [AR1-Vlanif10] tcp adjust-mss 1200
   [AR1-Vlanif10] quit
   ```

   b. 配置总部子网，创建VLAN20，将GE0/0/1接口加入VLAN20。配置VLANIF 20接口TCP最大报文段长度为1200字节并配置DHCP功能。
   ```
   <Huawei> system-view
   [Huawei] sysname AR2
   [AR2] vlan 20
   [AR2-vlan20] quit
   [AR2] interface GigabitEthernet 0/0/1
   [AR2-GigabitEthernet0/0/1] port link-type access
   [AR2-GigabitEthernet0/0/1] port default vlan 20
   [AR2-GigabitEthernet0/0/1] quit
   [AR2] dhcp enable
   [AR2] interface Vlanif 20
   [AR2-Vlanif20] ip address 10.2.1.1 24
   [AR2-Vlanif20] dhcp select interface
   [AR2-Vlanif20] tcp adjust-mss 1200
   [AR2-Vlanif20] quit
   ```

3. 配置Tunnel接口，创建GRE隧道。

   a. 配置总部WAN侧接口GE0/0/9的IP地址。

```
[AR2] interface GigabitEthernet 0/0/9
[AR2-GigabitEthernet0/0/9] ip address 2.2.2.2 24
[AR2-GigabitEthernet0/0/9] quit
```

   b. 配置总部的两个Tunnel接口。

```
[AR2] interface Tunnel0/0/1
[AR2-Tunnel0/0/1] tunnel-protocol gre
Warning: After this tunnel encapsulation protocol was configured, the MTU and other
parameter settings of the tunnel were deleted.
[AR2-Tunnel0/0/1] ip address 10.3.1.2 255.255.255.0
[AR2-Tunnel0/0/1] source GigabitEthernet 0/0/9
[AR2-Tunnel0/0/1] destination 1.1.1.1
[AR2-Tunnel0/0/1] quit
[AR2] interface Tunnel0/0/2
[AR2-Tunnel0/0/2] tunnel-protocol gre
Warning: After this tunnel encapsulation protocol was configured, the MTU and other
parameter settings of the tunnel were deleted.
[AR2-Tunnel0/0/2] ip address 10.4.1.2 255.255.255.0
[AR2-Tunnel0/0/2] source GigabitEthernet 0/0/9
[AR2-Tunnel0/0/2] destination 3.3.3.3
[AR2-Tunnel0/0/2] quit
```

   c. 配置分支的两个Tunnel接口。

```
[AR1] interface Tunnel0/0/1
[AR1-Tunnel0/0/1] tunnel-protocol gre
Warning: After this tunnel encapsulation protocol was configured, the MTU and other
parameter settings of the tunnel were deleted.
[AR1-Tunnel0/0/1] ip address 10.3.1.1 255.255.255.0
[AR1-Tunnel0/0/1] source Cellular 1/0/0
[AR1-Tunnel0/0/1] destination 2.2.2.2
[AR1-Tunnel0/0/1] quit
[AR1] interface Tunnel0/0/2
[AR1-Tunnel0/0/2] tunnel-protocol gre
Warning: After this tunnel encapsulation protocol was configured, the MTU and other
parameter settings of the tunnel were deleted.
[AR1-Tunnel0/0/2] ip address 10.4.1.1 255.255.255.0
[AR1-Tunnel0/0/2] source Cellular 2/0/0
[AR1-Tunnel0/0/2] destination 2.2.2.2
[AR1-Tunnel0/0/2] quit
```

4. 配置BFD会话，探测分支和总部之间主GRE隧道的连通性。

   a. 配置分支的BFD会话。

```
[AR1] bfd
[AR1-bfd] quit
[AR1] bfd aa bind peer-ip 10.3.1.2 source-ip 10.3.1.1
[AR1-bfd-session-aa] discriminator local 10
[AR1-bfd-session-aa] discriminator remote 20
[AR1-bfd-session-aa] commit
Info: The configuration succeeds, but BFD session cannot be created for the moment because
the route cannot be found.
[AR1-bfd-session-aa] quit
```

   b. 配置总部的BFD会话。

```
[AR2] bfd
[AR2-bfd] quit
[AR2] bfd bb bind peer-ip 10.3.1.1 source-ip 10.3.1.2
[AR2-bfd-session-bb] discriminator local 20
[AR2-bfd-session-bb] discriminator remote 10
[AR2-bfd-session-bb] commit
Info: The configuration succeeds, but BFD session cannot be created for the moment because
the route cannot be found.
[AR2-bfd-session-bb] quit
```

5. 配置静态路由，使企业分支和总部子网的用户可以互通。

a. 配置分支的静态路由，两条静态路由的出接口为5G Cellular接口，两条到总部子网的静态路由的出接口为Tunnel接口，并在主隧道接口Tunnel0/0/1所在的路由上绑定BFD会话。

```
[AR1] ip route-static 2.2.2.2 32 Cellular 1/0/0
[AR1] ip route-static 2.2.2.2 32 Cellular 2/0/0 preference 70
[AR1] ip route-static 10.2.1.0 255.255.255.0 Tunnel 0/0/1 track bfd-session aa
[AR1] ip route-static 10.2.1.0 255.255.255.0 Tunnel 0/0/2 preference 70
[AR1] quit
```

b. 配置总部的静态路由，并在主隧道接口Tunnel0/0/1所在的路由上绑定BFD会话。

```
[AR2] ip route-static 0.0.0.0 0.0.0.0 2.2.2.1
[AR2] ip route-static 10.1.1.0 255.255.255.0 Tunnel 0/0/1 track bfd-session bb
[AR2] ip route-static 10.1.1.0 255.255.255.0 Tunnel 0/0/2 preference 70
[AR2] quit
```

验证

1. 在AR1上执行命令**display ip interface brief Cellular 1/0/0**，查看Cellular1/0/0接口获取到的IP地址。

```
<AR1> display ip interface brief Cellular 1/0/0
*down: administratively down
^down: standby
(l): loopback
(s): spoofing
(E): E-Trunk down
Interface                   IP Address/Mask      Physical   Protocol

Cellular1/0/0                1.1.1.1/32          up         up
```

2. 在AR1上执行命令**display ip interface brief Cellular 2/0/0**，查看Cellular2/0/0接口获取到的IP地址。

```
<AR1> display ip interface brief Cellular 2/0/0
*down: administratively down
^down: standby
(l): loopback
(s): spoofing
(E): E-Trunk down
Interface                   IP Address/Mask      Physical   Protocol

Cellular2/0/0                3.3.3.3/32          up         up
```

3. 在AR1上执行命令**display Cellular 1/0/0 all**，查看Cellular1/0/0接口的状态信息。

```
<AR1> display Cellular 1/0/0 all
Modem State:
Hardware Information.
=====================
Model = RG801
Modem Type = 5G module
Modem Firmware Version = RG801HEAAAR01A07M8G
Hardware Version = HiB5000_MODEM Ver.A
Integrate circuit card identity (ICCID) = 98681020100202000069
International Mobile Subscriber Identity (IMSI) = 460070075591996
Mobile Station International ISDN Number (MSISDN) = None
International Mobile Equipment Identity (IMEI) = 867147050004457
Factory Serial Number (FSN) = 0123456789ABCDEF
Modem Status = Online
Profile Information.
====================
Profile 1
--------
PDP Type = IPv4, Header Compression = OFF
Data Compression = OFF
Access Point Name (APN) = 5gneta
Packet Session Status = Active
* - Default profile
```

```
Network Information.
====================
Current Service Status = Service available
Service Domain = Combined
Current Service = PS
Packet Service = Attached
Packet Session Status = Active
Current Roaming Status = Roaming
Network Selection Mode = Automatic
Network Connection Mode = LTE-NR
Current Network Connection = 5G(NSA)
Mobile Country Code (MCC) = 369
Mobile Network Code (MNC) = 77
Mobile Operator Information = Unknown
Tracking Area Code (TAC) = 1002
Cell ID = 9881858
Radio Information.
==================
Current Bands :
  WCDMA: AUTO
  LTE: B3
  NR: AUTO
LTE:
Current Band = B3
Current RSSI >= -51 dBm
Current RSRP = -68 dBm (strong)
Current RSRQ >= -3 dB
Current SINR = 6 dB
NR:
Current Band = N78
Current RSRP = -64 dBm (strong)
Current RSRQ = -10 dB
Current SINR = 35 dB
Bands supported :
  WCDMA: WCDMA850 WCDMA900 WCDMA2100
  FDD LTE: B1 B3 B5 B7 B8 B20 B28
  TDD LTE: B34 B38 B39 B40 B41
  FDD NR: N1 N3 N28
  TDD NR: N41 N77 N78 N79
  SUL NR: N80
Modem Security Information.
===========================
SIM ID = 1
PIN Verification = Disabled
PIN Status = Ready
Number of Retries remaining = 3
SIM Status = OK
```

4. 在AR1上执行**display bfd session all**命令，可以看到BFD会话已经建立，且状态为UP。

```
<AR1> display bfd session all
--------------------------------------------------------------------------------
Local Remote     PeerIpAddr      State     Type        InterfaceName
--------------------------------------------------------------------------------
10    20         10.3.1.2        Up        S_IP_PEER         -
--------------------------------------------------------------------------------
    Total UP/DOWN Session Number : 1/0
```

5. 在AR1的Cellular1/0/0接口上执行命令**shutdown**，模拟5G主链路故障。

```
<AR1> system-view
[AR1] interface Cellular 1/0/0
[AR1-Cellular1/0/0] shutdown
[AR1-Cellular1/0/0] quit
[AR1] quit
```

6. 在AR1上执行命令**ping -a 10.1.1.1 10.2.1.1**，模拟分支用户访问总部用户的流量，流量能Ping通。

```
<AR1> ping -a 10.1.1.1 10.2.1.1
  PING 10.2.1.1: 56  data bytes, press CTRL_C to break
    Reply from 10.2.1.1: bytes=56 Sequence=1 ttl=255 time=51 ms
```

```
  Reply from 10.2.1.1: bytes=56 Sequence=2 ttl=255 time=35 ms
  Reply from 10.2.1.1: bytes=56 Sequence=3 ttl=255 time=45 ms
  Reply from 10.2.1.1: bytes=56 Sequence=4 ttl=255 time=40 ms
  Reply from 10.2.1.1: bytes=56 Sequence=5 ttl=255 time=37 ms

 --- 10.2.1.1 ping statistics ---
  5 packet(s) transmitted
  5 packet(s) received
  0.00% packet loss
  round-trip min/avg/max = 35/41/51 ms
```

配置文件

AR1配置文件

```
#
 sysname AR1
#
vlan batch 10
#
dhcp enable
#
bfd
#
interface Vlanif10
 ip address 10.1.1.1 255.255.255.0
 dhcp select interface
 tcp adjust-mss 1200
#
interface GigabitEthernet0/0/1
 port link-type access
 port default vlan 10
#
interface Cellular1/0/0
 dialer enable-circular
 apn-profile 5gprofilea
 dialer timer autodial 10
 modem auto-recovery dial action modem-reboot fail-times 128
 modem auto-recovery icmp-unreachable action modem-reboot
 modem auto-recovery services-unavailable action modem-reboot test-times 0 interval 3600
 ip address negotiate
#
interface Cellular2/0/0
 dialer enable-circular
 apn-profile 5gprofileb
 dialer timer autodial 10
 modem auto-recovery dial action modem-reboot fail-times 128
 modem auto-recovery icmp-unreachable action modem-reboot
 modem auto-recovery services-unavailable action modem-reboot test-times 0 interval 3600
 ip address negotiate
#
interface Tunnel0/0/1
 ip address 10.3.1.1 255.255.255.0
 tunnel-protocol gre
 source Cellular1/0/0
 destination 2.2.2.2
#
interface Tunnel0/0/2
 ip address 10.4.1.1 255.255.255.0
 tunnel-protocol gre
 source Cellular2/0/0
 destination 2.2.2.2
#
apn profile 5gprofilea
 apn 5gneta
apn profile 5gprofileb
 apn 5gnetb
#
bfd aa bind peer-ip 10.3.1.2 source-ip 10.3.1.1
 discriminator local 10
```

```
 discriminator remote 20
 commit
#
ip route-static 2.2.2.2 255.255.255.255 Cellular1/0/0
ip route-static 2.2.2.2 255.255.255.255 Cellular2/0/0 preference 70
ip route-static 10.2.1.0 255.255.255.0 Tunnel0/0/1 track bfd-session aa
ip route-static 10.2.1.0 255.255.255.0 Tunnel0/0/2 preference 70
#
return
```

AR2配置文件

```
#
 sysname AR2
#
vlan batch 20
#
dhcp enable
#
bfd
#
interface Vlanif20
 ip address 10.2.1.1 255.255.255.0
 dhcp select interface
 tcp adjust-mss 1200
#
interface GigabitEthernet0/0/1
 port link-type access
 port default vlan 20
#
interface GigabitEthernet0/0/9
 ip address 2.2.2.2 255.255.255.0
#
interface Tunnel0/0/1
 ip address 10.3.1.2 255.255.255.0
 tunnel-protocol gre
 source GigabitEthernet0/0/9
 destination 1.1.1.1
#
interface Tunnel0/0/2
 ip address 10.4.1.2 255.255.255.0
 tunnel-protocol gre
 source GigabitEthernet0/0/9
 destination 3.3.3.3
#
bfd bb bind peer-ip 10.3.1.1 source-ip 10.3.1.2
 discriminator local 20
 discriminator remote 10
 commit
#
ip route-static 0.0.0.0 0.0.0.0 2.2.2.1
ip route-static 10.1.1.0 255.255.255.0 Tunnel0/0/1 track bfd-session bb
ip route-static 10.1.1.0 255.255.255.0 Tunnel0/0/2 preference 70
#
return
```

7.3.4 配置分支使用 5G 双链路和总部建立 Ethernet over GRE 主备隧道互联示例

场景介绍

Ethernet over GRE是将以太网协议的报文通过GRE封装后，在另一个网络层协议（如IPv4）的网络中传输。当企业总部和分支的网络都是以太网络，且总部和分支之间需要交互二层业务时，AR可以通过插入两个5G单板，与对端设备建立两个GRE隧道形成两条承载链路。再采用Ethernet over GRE技术，将以太业务封装在GRE隧道中，通过GRE链路进行主备切换，达到双5G上行快速倒换或负载分担的目的。

组网需求

如图1所示，企业分支和总部之间通过Internet网络互通。企业分支使用AR1企业路由器作为出口网关，为了提高链路可靠性，AR1企业路由器上插了两块5G单板，提供两条5G链路接入Internet。企业分支和总部之间需要交互二层业务时，分支和总部之间构建Ethernet over GRE隧道，通过配置不同的静态路由优先级实现业务主备。BFD检测并监控主Ethernet over GRE隧道的连通状态，实现分支及总部之间二层业务的快速收敛。

图 7-18 配置分支使用 5G 双链路和总部建立 Ethernet over GRE 主备隧道互联组网图

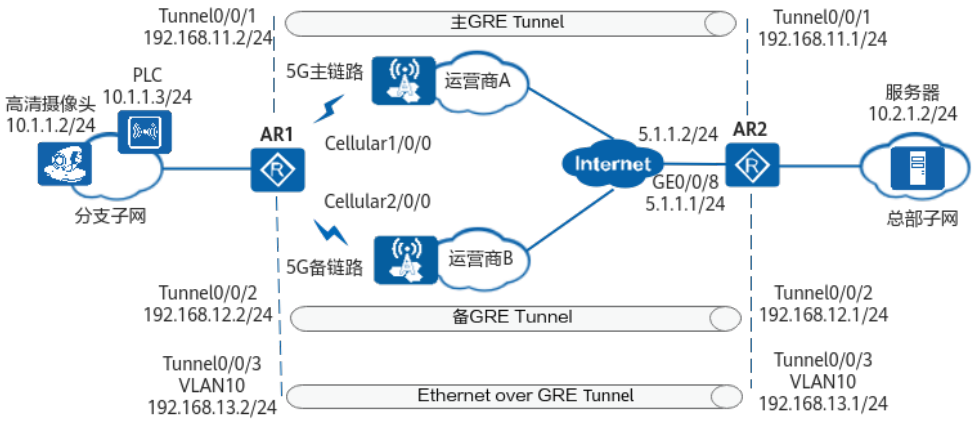

数据准备

表 7-22 数据准备表

项目	数据	说明
运营商A给分支分配的APN名称	5gneta	APN名称需提前从运营商处获取。
运营商B给分支分配的APN名称	5gnetb	
运营商A给分支主5G Cellular1/0/0接口分配的IP地址	1.1.1.1/32	5G Cellular接口拨号接入运营商后，运营商给5G Cellular接口自动分配的IP地址。 **说明** 使用GRE隧道时，要求运营商给5G Cellular接口分配的IP地址为固定IP地址。本例中，假设运营商为5G Cellular接口分配的固定IP地址为1.1.1.1和3.3.3.3。
运营商B给分支备5G Cellular2/0/0接口分配的IP地址	3.3.3.3/32	
运营商给总部GE0/0/8接口分配的IP地址	5.1.1.1/24	总部AR2通过有线的方式接入Internet，该有线接口GE0/0/8采用静态方式配置IP地址。
运营商对接总部GE0/0/8接口的IP地址	5.1.1.2/24	运营商对接总部GE0/0/8接口的IP地址用于配置路由信息，使总部和Internet之间的路由互通。

项目	数据	说明
分支AR1主Tunnel0/0/1接口的IP地址	192.168.11.2/24	分支和总部主备GRE隧道的Tunnel接口地址。
分支AR1备Tunnel0/0/2接口的IP地址	192.168.12.2/24	
总部AR2主Tunnel0/0/1接口的IP地址	192.168.11.1/24	
总部AR2备Tunnel0/0/2接口的IP地址	192.168.12.1/24	
分支AR1 LAN侧接口信息	LAN侧物理接口：GE0/0/1 绑定的VE接口：VE0/0/2 所属VLAN：10	分支和总部用户都在同一个网段，所属的VLAN都为VLAN 10。
总部AR2 LAN侧接口信息	LAN侧物理接口：GE0/0/1 绑定的VE接口：VE0/0/2 所属VLAN：10	
分支AR1 Tunnel0/0/3接口信息	IP地址：192.168.13.2/24 绑定的VE接口：VE0/0/1 所属VLAN：10	分支Ethernet over GRE隧道的地址。
总部AR2 Tunnel0/0/3接口信息	IP地址：192.168.13.1/24 绑定的VE接口：VE0/0/1 所属VLAN：10	总部Ethernet over GRE隧道的地址。

MTU 及 TCP MSS 参数配置说明

为了减少网络传输中不必要的分片和重组，网络规划时需要合理设置终端发出的报文大小，设置依据如下：

- 对于UDP报文，可以调节发送端的MTU值，如果发送端不支持调节MTU值，则需要在5G AR设备上调节MTU值，以确保报文在网络中传输时不会产生二次分片。

- 对于TCP报文，可以配置5G AR设备的TCP MSS值，通过修改应用层报文数据包的长度来避免报文分片。

在5G2B专线场景中，TCP MSS取值比较简单，在隧道两端AR设备的LAN侧接入物理口或VLANIF口上将配置TCP MSS配置为推荐值1200。MTU取值相对复杂，与如下三个参数有关，具体的配置方法请参见**表2** 。

- 单层GRE隧道组网，报文经过5G AR设备后会增加28字节，即单层GRE头长度为28字节。
- 双层GRE隧道组网，报文经过5G AR设备后会增加56字节，即双层GRE头长度为56字节。
- 5G网络中GTP封装会增加至少40字节，其中IP头20字节，UDP头8字节，GTP消息封装12字节。考虑到GTP支持扩展消息头，建议多预留1至2个扩展消息头长度（4或8字节）作为缓冲，即GTP封装头长度最大为48字节。

表 7-23 MTU 参数配置方法

组网场景	在发送端调节MTU方值	或者在5G AR上调节MTU值
单层GRE隧道组网	发送端MTU值=网络中设备允许通过MTU值减去单层GRE头长度28，再减去GTP封装头长度48，即发送端MTU值=MTU-28-48。	5G接口MTU值=网络中设备允许通过MTU值减去GTP封装头长度，即5G接口MTU值=MTU-48。
双层GRE隧道组网	发送端MTU值=网络中设备允许通过MTU值减去双层GRE头长度56，再减去GTP封装头长度48，即发送端MTU值=MTU-56-48。	最外层L3 GRE隧道接口MTU值=网络中设备允许通过MTU值减去单层GRE头长度28，再减去GTP封装头长度48，即最外层L3 GRE隧道接口MTU值=MTU-28-48。本例中，MTU取值为1500。

配置思路

1. 配置5G Cellular接口的连接参数，实现5G Cellular接口接入5G网络。
2. 配置企业子网，为内部用户自动分配IP地址。
3. 配置Tunnel接口，创建主备GRE隧道，使企业分支和总部之间的业务流量通过GRE隧道传输。
4. 配置Ethernet over GRE功能，将二层VE接口绑定到WAN侧Tunnel接口和LAN侧物理接口，使企业分支和总部之间的以太报文可以通过Ethernet over GRE隧道传输。
5. 配置BFD会话，探测分支和总部之间主Ethernet over GRE隧道的连通性。
6. 配置静态路由，使企业分支和总部子网的用户可以互通。

说明

在5G Cellular接口下执行命令**dialer enable-circular**配置轮询拨号功能时，设备会同时下发自动拨号、IP地址协商和5G Modem自愈的相关配置，无需再重复配置。

操作步骤

1. 配置5G Cellular接口的连接参数，实现5G Cellular接口接入5G网络。
   a. 创建APN模板。
   ```
   <Huawei> system-view
   [Huawei] sysname AR1
   [AR1] apn profile 5gprofilea
   [AR1-apn-profile-5gprofilea] apn 5gneta
   [AR1-apn-profile-5gprofilea] quit
   [AR1] apn profile 5gprofileb
   [AR1-apn-profile-5gprofileb] apn 5gnetb
   [AR1-apn-profile-5gprofileb] quit
   ```
   b. 使能轮询DCC功能，配置自动拨号连接。
   ```
   [AR1] interface Cellular 1/0/0
   [AR1-Cellular1/0/0] dialer enable-circular
   [AR1-Cellular1/0/0] quit
   [AR1] interface Cellular 2/0/0
   [AR1-Cellular2/0/0] dialer enable-circular
   [AR1-Cellular2/0/0] quit
   ```
   c. 在5G Cellular接口上绑定APN模板。
   ```
   [AR1] interface Cellular 1/0/0
   [AR1-Cellular1/0/0] apn-profile 5gprofilea
   Info: The configuration will become effective after link reset.
   [AR1-Cellular1/0/0] shutdown
   [AR1-Cellular1/0/0] undo shutdown
   [AR1-Cellular1/0/0] quit
   [AR1] interface Cellular 2/0/0
   [AR1-Cellular2/0/0] apn-profile 5gprofileb
   Info: The configuration will become effective after link reset.
   [AR1-Cellular2/0/0] shutdown
   [AR1-Cellular2/0/0] undo shutdown
   [AR1-Cellular2/0/0] quit
   ```
2. 配置Tunnel接口，创建GRE隧道。
   a. 配置总部WAN侧接口GE0/0/8的IP地址。
   ```
   <Huawei> system-view
   [Huawei] sysname AR2
   [AR2] interface GigabitEthernet 0/0/8
   [AR2-GigabitEthernet0/0/8] ip address 5.1.1.1 255.255.255.0
   [AR2-GigabitEthernet0/0/8] quit
   ```
   b. 配置总部的三个Tunnel接口。
   ```
   [AR2] interface loopback 1
   [AR2-loopback1] ip address 6.6.6.6 255.255.255.255
   [AR2-loopback1] quit
   [AR2] interface Tunnel0/0/1
   [AR2-Tunnel0/0/1] tunnel-protocol gre
   Warning: After this tunnel encapsulation protocol was configured, the MTU and other
   parameter settings of the tunnel were deleted.
   [AR2-Tunnel0/0/1] ip address 192.168.11.1 255.255.255.0
   [AR2-Tunnel0/0/1] gre key plain 1
   [AR2-Tunnel0/0/1] source GigabitEthernet 0/0/8
   [AR2-Tunnel0/0/1] destination 1.1.1.1
   [AR2-Tunnel0/0/1] mtu 1424
   [AR2-Tunnel0/0/1] quit
   [AR2] interface Tunnel0/0/2
   [AR2-Tunnel0/0/2] tunnel-protocol gre
   Warning: After this tunnel encapsulation protocol was configured, the MTU and other
   parameter settings of the tunnel were deleted.
   [AR2-Tunnel0/0/2] ip address 192.168.12.1 255.255.255.0
   [AR2-Tunnel0/0/2] gre key plain 2
   [AR2-Tunnel0/0/2] source GigabitEthernet 0/0/8
   [AR2-Tunnel0/0/2] destination 3.3.3.3
   [AR2-Tunnel0/0/2] mtu 1424
   [AR2-Tunnel0/0/2] quit
   [AR2] interface Tunnel0/0/3
   [AR2-Tunnel0/0/3] tunnel-protocol gre
   ```

```
Warning: After this tunnel encapsulation protocol was configured, the MTU and other
parameter settings of the tunnel were deleted.
[AR2-Tunnel0/0/3] ip address 192.168.13.1 255.255.255.0
[AR2-Tunnel0/0/3] source 6.6.6.6
[AR2-Tunnel0/0/3] destination 5.5.5.5
[AR2-Tunnel0/0/3] quit
```

c. 配置分支的三个Tunnel接口。

```
[AR1] interface loopback 1
[AR1-loopback1] ip address 5.5.5.5 255.255.255.255
[AR1-loopback1] quit
[AR1] interface Tunnel0/0/1
[AR1-Tunnel0/0/1] tunnel-protocol gre
Warning: After this tunnel encapsulation protocol was configured, the MTU and other
parameter settings of the tunnel were deleted.
[AR1-Tunnel0/0/1] ip address 192.168.11.2 255.255.255.0
[AR1-Tunnel0/0/1] source Cellular 1/0/0
[AR1-Tunnel0/0/1] gre key plain 1
[AR1-Tunnel0/0/1] destination 5.5.5.1
[AR1-Tunnel0/0/1] mtu 1424
[AR1-Tunnel0/0/1] quit
[AR1] interface Tunnel0/0/2
[AR1-Tunnel0/0/2] tunnel-protocol gre
Warning: After this tunnel encapsulation protocol was configured, the MTU and other
parameter settings of the tunnel were deleted.
[AR1-Tunnel0/0/2] ip address 192.168.12.2 255.255.255.0
[AR1-Tunnel0/0/2] source Cellular 2/0/0
[AR1-Tunnel0/0/2] gre key plain 2
[AR1-Tunnel0/0/2] destination 5.5.5.1
[AR1-Tunnel0/0/2] mtu 1424
[AR1-Tunnel0/0/2] quit
[AR1] interface Tunnel0/0/3
[AR1-Tunnel0/0/3] tunnel-protocol gre
Warning: After this tunnel encapsulation protocol was configured, the MTU and other
parameter settings of the tunnel were deleted.
[AR1-Tunnel0/0/3] ip address 192.168.13.2 255.255.255.0
[AR1-Tunnel0/0/3] source 5.5.5.5
[AR1-Tunnel0/0/3] destination 6.6.6.6
[AR1-Tunnel0/0/3] quit
```

3. 配置Ethernet over GRE，创建VE接口。

a. 创建分支的二层VE接口VE0/0/1和VE0/0/2。

```
[AR1] vlan 10
[AR1-vlan10] quit
[AR1] interface Virtual-Ethernet 0/0/1
[AR1-Virtual-Ethernet0/0/1] portswitch
Vlan Info: The operation may take a few seconds. Please wait for a moment...done
[AR1-Virtual-Ethernet0/0/1] port link-type trunk
[AR1-Virtual-Ethernet0/0/1] undo port trunk allow-pass vlan 1
[AR1-Virtual-Ethernet0/0/1] port trunk allow-pass vlan 10
[AR1-Virtual-Ethernet0/0/1] quit
[AR1] interface Virtual-Ethernet 0/0/2
[AR1-Virtual-Ethernet0/0/2] portswitch
Vlan Info: The operation may take a few seconds. Please wait for a moment...done
[AR1-Virtual-Ethernet0/0/2] port link-type trunk
[AR1-Virtual-Ethernet0/0/2] undo port trunk allow-pass vlan 1
[AR1-Virtual-Ethernet0/0/2] port trunk allow-pass vlan 10
[AR1-Virtual-Ethernet0/0/2] quit
```

b. 创建总部的二层VE接口VE0/0/1和VE0/0/2。

```
[AR2] vlan 10
[AR2-vlan10] quit
[AR2] interface Virtual-Ethernet 0/0/1
[AR2-Virtual-Ethernet0/0/1] portswitch
Vlan Info: The operation may take a few seconds. Please wait for a moment...done
[AR2-Virtual-Ethernet0/0/1] port link-type trunk
[AR2-Virtual-Ethernet0/0/1] undo port trunk allow-pass vlan 1
[AR2-Virtual-Ethernet0/0/1] port trunk allow-pass vlan 10
[AR2-Virtual-Ethernet0/0/1] quit
[AR2] interface Virtual-Ethernet 0/0/2
```

```
[AR2-Virtual-Ethernet0/0/2] portswitch
Vlan Info: The operation may take a few seconds. Please wait for a moment...done
[AR2-Virtual-Ethernet0/0/2] port link-type trunk
[AR2-Virtual-Ethernet0/0/2] undo port trunk allow-pass vlan 1
[AR2-Virtual-Ethernet0/0/2] port trunk allow-pass vlan 10
[AR2-Virtual-Ethernet0/0/2] quit
```

4. 将二层VE接口绑定到WAN侧Tunnel接口和LAN侧物理接口。
   a. 配置分支的VE0/0/1绑定到Tunnel0/0/3接口，VE0/0/2绑定到GE0/0/1接口。

```
[AR1] interface Tunnel0/0/3
[AR1-Tunnel0/0/1] map interface Virtual-Ethernet 0/0/1
[AR1-Tunnel0/0/1] quit
[AR1] interface GigabitEthernet 0/0/1
[AR1-GigabitEthernet0/0/1] undo portswitch  //GE0/0/1如果不是三层物理以太网接口，则需要执行undo portswitch命令切换
[AR1-GigabitEthernet0/0/1] map interface Virtual-Ethernet 0/0/2
Warnning: The interface is being bound to Virtual-Ethernet.Other services are unavailable on the interface.
[AR1-GigabitEthernet0/0/1] tcp adjust-mss 1200
[AR1-GigabitEthernet0/0/1] quit
```

   b. 配置总部的VE0/0/1绑定到Tunnel0/0/3接口，VE0/0/2绑定到GE0/0/1接口。

```
[AR2] interface Tunnel0/0/3
[AR2-Tunnel0/0/1] map interface Virtual-Ethernet 0/0/1
[AR2-Tunnel0/0/1] quit
[AR2] interface GigabitEthernet 0/0/1
[AR2-GigabitEthernet0/0/1] undo portswitch
[AR2-GigabitEthernet0/0/1] map interface Virtual-Ethernet 0/0/2
Warnning: The interface is being bound to Virtual-Ethernet.Other services are unavailable on the interface.
[AR2-GigabitEthernet0/0/1] tcp adjust-mss 1200
[AR2-GigabitEthernet0/0/1] quit
```

5. 配置BFD会话，探测分支和总部之间主Ethernet over GRE隧道的连通性。
   a. 配置分支的BFD会话。

```
[AR1] bfd
[AR1-bfd] quit
[AR1] bfd 1 bind peer-ip 192.168.11.1 source-ip 192.168.11.2
[AR1-bfd-session-aa] discriminator local 2
[AR1-bfd-session-aa] discriminator remote 1
[AR1-bfd-session-aa] commit
Info: The configuration succeeds, but BFD session cannot be created for the moment because the route cannot be found.
[AR1-bfd-session-aa] quit
```

   b. 配置总部的BFD会话。

```
[AR2] bfd
[AR2-bfd] quit
[AR2] bfd 1 bind peer-ip 192.168.11.2 source-ip 192.168.11.1
[AR2-bfd-session-bb] discriminator local 1
[AR2-bfd-session-bb] discriminator remote 2
[AR2-bfd-session-bb] commit
Info: The configuration succeeds, but BFD session cannot be created for the moment because the route cannot be found.
[AR2-bfd-session-bb] quit
```

6. 配置静态路由，使企业分支和总部子网的用户可以互通。
   a. 配置分支的静态路由，两条静态路由的出接口为5G Cellular接口，两条到总部子网的静态路由的出接口为Tunnel接口，并在主隧道接口Tunnel0/0/1所在的路由上绑定BFD会话。

```
[AR1] ip route-static 5.1.1.1 255.255.255.255 Cellular 1/0/0
[AR1] ip route-static 5.1.1.1 255.255.255.255 Cellular 2/0/0 preference 70
[AR1] ip route-static 5.5.5.5 255.255.255.255 Tunnel 0/0/1 track bfd-session 1
[AR1] ip route-static 5.5.5.5 255.255.255.255 Tunnel 0/0/2 preference 70
[AR1] quit
```

   b. 配置总部的静态路由，并在主隧道接口Tunnel0/0/1所在的路由上绑定BFD会话。

```
[AR2] ip route-static 0.0.0.0 0.0.0.0 5.1.1.2
[AR2] ip route-static 6.6.6.6 255.255.255.255 Tunnel 0/0/1 track bfd-session 1
[AR2] ip route-static 6.6.6.6 255.255.255.255 Tunnel 0/0/2 preference 70
[AR2] quit
```

验证

1. 在AR1上执行命令**display ip interface brief Cellular 1/0/0**，查看Cellular1/0/0接口获取到的IP地址。

```
<AR1> display ip interface brief Cellular 1/0/0
*down: administratively down
^down: standby
(l): loopback
(s): spoofing
(E): E-Trunk down
Interface                   IP Address/Mask      Physical   Protocol

Cellular1/0/0                1.1.1.1/32          up         up
```

2. 在AR1上执行命令**display ip interface brief Cellular 2/0/0**，查看Cellular2/0/0接口获取到的IP地址。

```
<AR1> display ip interface brief Cellular 2/0/0
*down: administratively down
^down: standby
(l): loopback
(s): spoofing
(E): E-Trunk down
Interface                   IP Address/Mask      Physical   Protocol

Cellular2/0/0                3.3.3.3/32          up         up
```

3. 在AR1上执行命令**display Cellular 1/0/0 all**，查看Cellular1/0/0接口的状态信息。

```
<AR1> display Cellular 1/0/0 all
Modem State:
Hardware Information.
=====================
Model = RG801
Modem Type = 5G module
Modem Firmware Version = RG801HEAAAR01A07M8G
Hardware Version = HiB5000_MODEM Ver.A
Integrate circuit card identity (ICCID) = 98681020100202000069
International Mobile Subscriber Identity (IMSI) = 460070075591996
Mobile Station International ISDN Number (MSISDN) = None
International Mobile Equipment Identity (IMEI) = 867147050004457
Factory Serial Number (FSN) = 0123456789ABCDEF
Modem Status = Online
Profile Information.
====================
Profile 1
--------
PDP Type = IPv4, Header Compression = OFF
Data Compression = OFF
Access Point Name (APN) = 5gneta
Packet Session Status = Active
* - Default profile
Network Information.
====================
Current Service Status = Service available
Service Domain = Combined
Current Service = PS
Packet Service = Attached
Packet Session Status = Active
Current Roaming Status = Roaming
Network Selection Mode = Automatic
Network Connection Mode = LTE-NR
Current Network Connection = 5G(NSA)
Mobile Country Code (MCC) = 369
```

```
Mobile Network Code (MNC) = 77
Mobile Operator Information = Unknown
Tracking Area Code (TAC) = 1002
Cell ID = 9881858
Radio Information.
==================
Current Bands :
  WCDMA: AUTO
  LTE: B3
  NR: AUTO
LTE:
Current Band = B3
Current RSSI >= -51 dBm
Current RSRP = -68 dBm (strong)
Current RSRQ >= -3 dB
Current SINR = 6 dB
NR:
Current Band = N78
Current RSRP = -64 dBm (strong)
Current RSRQ = -10 dB
Current SINR = 35 dB
Bands supported :
  WCDMA: WCDMA850 WCDMA900 WCDMA2100
  FDD LTE: B1 B3 B5 B7 B8 B20 B28
  TDD LTE: B34 B38 B39 B40 B41
  FDD NR: N1 N3 N28
  TDD NR: N41 N77 N78 N79
  SUL NR: N80
Modem Security Information.
===========================
SIM ID = 1
PIN Verification = Disabled
PIN Status = Ready
Number of Retries remaining = 3
SIM Status = OK
```

4. 在AR1上执行**display bfd session all**命令，可以看到BFD会话已经建立，且状态为Up。

```
<AR1> display bfd session all
--------------------------------------------------------------------------------
Local Remote     PeerIpAddr      State     Type        InterfaceName
--------------------------------------------------------------------------------
1    2         192.168.11.1        Up      S_IP_PEER         -
--------------------------------------------------------------------------------
    Total UP/DOWN Session Number : 1/0
```

配置文件

AR1配置文件

```
#
 sysname AR1
#
apn profile 5gprofilea
 apn 5gneta
apn profile 5gprofileb
 apn 5gnetb
#
vlan batch 10
#
interface Virtual-Ethernet0/0/1
 portswitch
 port link-type trunk
 undo port trunk allow-pass vlan 1
 port trunk allow-pass vlan 10
#
interface Virtual-Ethernet0/0/2
 portswitch
 port link-type trunk
 undo port trunk allow-pass vlan 1
```

```
 port trunk allow-pass vlan 10
#
interface GigabitEthernet0/0/1
 undo portswitch
 map interface Virtual-Ethernet0/0/2
 tcp adjust-mss 1200
#
interface Cellular1/0/0
 dialer enable-circular
 apn-profile 5gprofilea
 dialer timer autodial 10
 modem auto-recovery dial action modem-reboot fail-times 128
 modem auto-recovery icmp-unreachable action modem-reboot
 modem auto-recovery services-unavailable action modem-reboot test-times 0 interval 3600
 ip address negotiate
#
interface Cellular2/0/0
 dialer enable-circular
 apn-profile 5gprofileb
 dialer timer autodial 10
 modem auto-recovery dial action modem-reboot fail-times 128
 modem auto-recovery icmp-unreachable action modem-reboot
 modem auto-recovery services-unavailable action modem-reboot test-times 0 interval 3600
 ip address negotiate
#
interface LoopBack1
 ip address 6.6.6.6 255.255.255.255
#
interface Tunnel0/0/1
 ip address 192.168.11.2 255.255.255.0
 tunnel-protocol gre
 gre key plain 1
 source Cellular1/0/0
 destination 5.5.5.1
 mtu 1424
#
interface Tunnel0/0/2
 ip address 192.168.12.2 255.255.255.0
 tunnel-protocol gre
 gre key plain 2
 source Cellular2/0/0
 destination 5.5.5.1
 mtu 1424
#
interface Tunnel0/0/3
 ip address 192.168.13.2 255.255.255.0
 tunnel-protocol gre
 source 6.6.6.6
 destination 5.5.5.5
 map interface Virtual-Ethernet0/0/1
#
bfd
#
bfd 1 bind peer-ip 192.168.11.1 source-ip 192.168.11.2
 discriminator local 2
 discriminator remote 1
 commit
#
ip route-static 5.1.1.1 255.255.255.255 Cellular1/0/0
ip route-static 5.1.1.1 255.255.255.255 Cellular2/0/0 preference 70
ip route-static 5.5.5.5 255.255.255.255 Tunnel0/0/1 track bfd-session 1
ip route-static 5.5.5.5 255.255.255.255 Tunnel0/0/2 preference 70
#
return
```

AR2配置文件

```
#
 sysname AR2
#
```

```
interface GigabitEthernet0/0/8
 ip address 5.1.1.1 255.255.255.0
#
interface Virtual-Ethernet0/0/1
 portswitch
 port link-type trunk
 undo port trunk allow-pass vlan 1
 port trunk allow-pass vlan 10
#
interface Virtual-Ethernet0/0/2
 portswitch
 port link-type trunk
 undo port trunk allow-pass vlan 1
 port trunk allow-pass vlan 10
#
interface GigabitEthernet0/0/1
 undo portswitch
 map interface Virtual-Ethernet0/0/2
 tcp adjust-mss 1200
#
interface Tunnel0/0/1
 ip address 192.168.11.1 255.255.255.0
 tunnel-protocol gre
 gre key plain 1
 source GigabitEthernet0/0/8
 destination 1.1.1.1
 mtu 1424
#
interface Tunnel0/0/2
 ip address 192.168.12.1 255.255.255.0
 tunnel-protocol gre
 gre key plain 2
 source GigabitEthernet0/0/8
 destination 3.3.3.3
 mtu 1424
#
interface LoopBack1
 ip address 5.5.5.5 255.255.255.255
#
interface Tunnel0/0/3
 ip address 192.168.13.1 255.255.255.0
 tunnel-protocol gre
 source 5.5.5.5
 destination 6.6.6.6
 map interface Virtual-Ethernet0/0/1
#
bfd
#
bfd 1 bind peer-ip 192.168.11.2 source-ip 192.168.11.1
 discriminator local 1
 discriminator remote 2
 commit
#
ip route-static 0.0.0.0 0.0.0.0 32.1.1.1
ip route-static 6.6.6.6 255.255.255.255 Tunnel0/0/1 track bfd-session 1
ip route-static 6.6.6.6 255.255.255.255 Tunnel0/0/2 preference 70
#
return
```